CrustBuster
SPEED KING INC.

P.O. Box 526 - Spearville, Kansas 67876 - (620) 227-7106

BeltVeyor

16" Honeycomb / Crescent

Owner's Manual

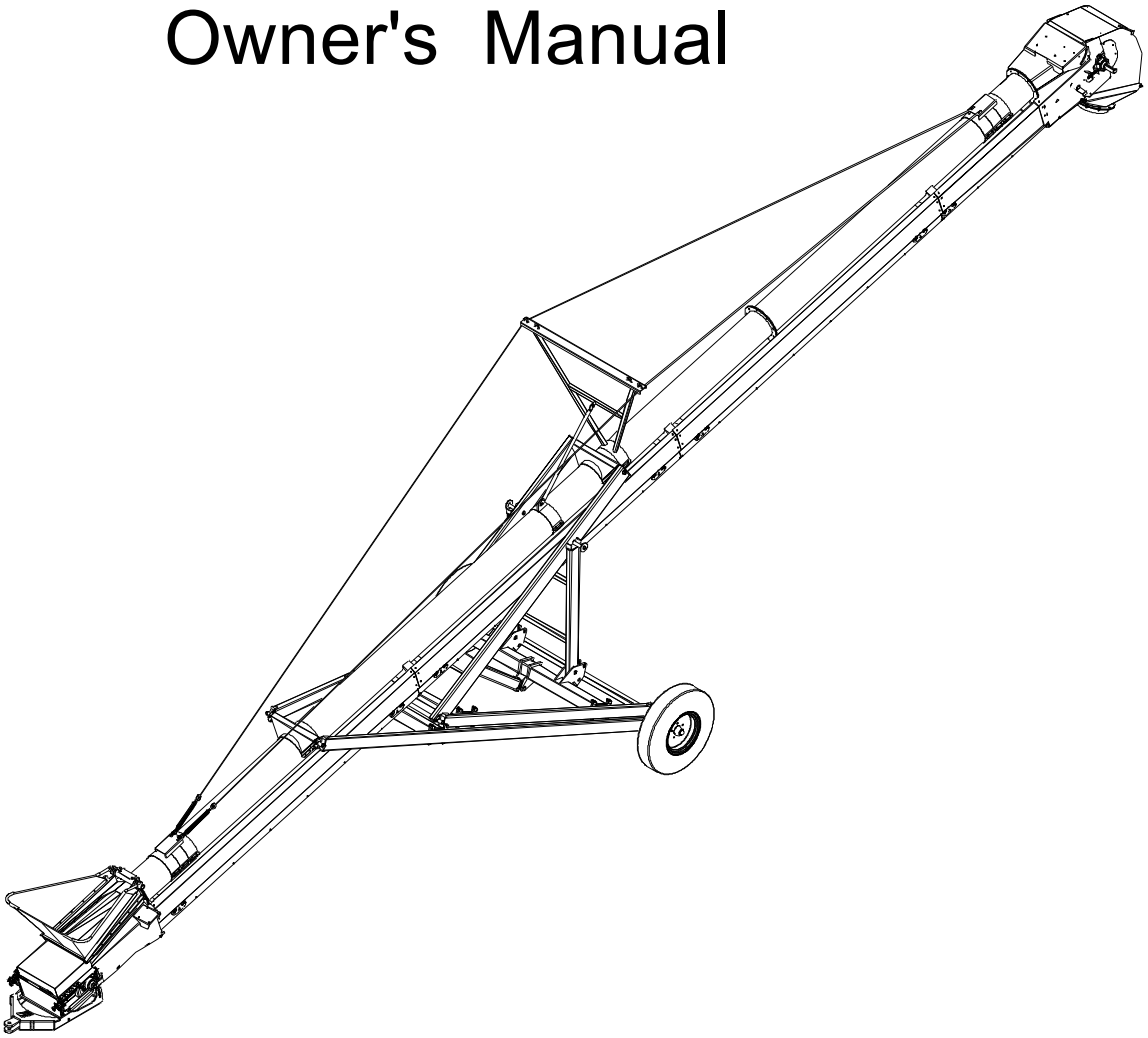

04149100 2012

Table of Contents

Warranty Information. . . . Inside Front Cover
Operator Qualifications 1
Safety 2-4
Decal Locations. 5
Maintenance 6-8
Troubleshooting Guide 9
Dimensions & Diagrams 10-12
Accessories. 13-14
Repair Parts. 15-18

20' Beltveyor
- Specifications 19
- Electric Unit. 20-25
- Hydraulic Unit 26-31

30' Beltveyor
- Specifications 33
- Electric Unit. 34-39
- Hydraulic Unit 40-45

40' Beltveyor
- Specifications 47
- Electric Unit. 48-53
- PTO Unit 54-59
- Hydraulic Unit 60-65

50' Beltveyor
- Specifications 67
- Electric Unit. 68-73
- PTO Unit 74-79

70' Beltveyor
- Specifications 81
- Electric Unit. 82-87
- PTO Unit 88-93

Warranty

WARRANTY: In addition to the implied warranties of fitness and of merchantability, CrustBuster®/Speed King, Inc. warrants new products sold by it to be free from defects in workmanship and material for a period of 12 months, from the date of delivery to the first user customer. Warranty on purchased parts (cylinder, blades, bearings, shanks, etc.) will be the same as that offered by the appropriate manufacturer of these parts.

EXCLUSIONS: No warranty of any kind is made by CrustBuster®/Speed King, Inc. with regard to new products which have been subject to operation in excess of recommended capacities, misuse, abuse, negligence, or accident, or have been altered or repaired in any manner not authorized by CrustBuster®/Speed King, Inc. CrustBuster®/Speed King, Inc. is constantly striving to improve its products. Changes in design and improvement will be made whenever CrustBuster®/Speed King, Inc. believes the efficiency of its products will be improved thereby, but without incurring any obligation to incorporate such improvements in any products which have been shipped or are in service. No obligation exists for compensation of unauthorized repairs or modifications without prior approval. And in no event will CrustBuster®/Speed King, Inc. be liable for consequential damages, such as but not limited to: downtime, delayed or late tillage or planting, etc.

WARRANTY REGISTRATION: This warranty is not valid unless registered with CrustBuster®/Speed King, Inc. within 10 days from the date of purchase. It is the sole responsibility of the selling retail dealer to fill out the registration forms and see that they are properly filed with CrustBuster®/Speed King, Inc. This can be done at crustbuster.com.

WARRANTY PROCEDURE: Should any part fail to conform with this warranty, CrustBuster®/Speed King, Inc. will repair or replace the part or parts which do not conform. If a part is defective, take it to your authorized CrustBuster® Farm Equipment Dealer immediately, along with your warranty registration, and complete the proper forms requesting a warranty adjustment. Our representative will pick up the part to be returned to the factory for examination. If the customer (first user) requests that a new part be substituted for the old part, a new part will be charged to the dealer who will in turn charge the customer. If the part is found by us to be defective, a credit for the part will be given to the dealer to be passed on to the customer. If the dealer or customer wishes to repair the part, this will be done only if authorized by CrustBuster®/Speed King, Inc. This warranty procedure is in addition to all remedies authorized by law.

CRUSTBUSTER®/SPEED KING, INC.
Box 526
Spearville, KS 67876

Specifications are subject to change without notice. CrustBuster ® is a registered trademark of CrustBuster/Speed King, Inc.

Operator Qualifications

Operation of this BeltVeyor shall be limited to competent and experienced persons. In addition, anyone who will operate or work around BeltVeyor must use good common sense. In order to be qualified, he or she must also know and meet all other requirements, such as:

1. Some regulations specify that no one under the age of 16 may operate power machinery. It is your responsibility to know what these regulations are in your area or situation.

2. Current OSHA regulations state in part: "At the time of initial assignment and at least annually thereafter the employer shall instruct EVERY employee in the safe operation of servicing of all equipment with which the employer is, or will be involved."

3. Unqualified persons are to STAY OUT of the work area.

4. A person who has not read and understood all operating and safety instructions is not qualified to operate the machinery.





FAILURE TO READ THIS BELTVEYOR MANUAL AND ITS SAFETY INSTRUCTIONS IS A MISUSE OF THE EQUIPMENT.

Sign Off Sheet
As a requirement of OSHA, it is necessary for the employer to train the employee in the safe operation and safety procedures with this BeltVeyor. We include this sign off sheet for your convenience and personal record keeping.

DATE	EMPLOYER	EMPLOYER'S SIGNATURE



BE ALERT!

Your Safety is involved.

General Safety Statement



WATCH FOR THIS SYMBOL. IT POINTS OUT IMPORTANT SAFETY PRECAUTIONS. IT MEANS "ATTENTION —— BECOME ALERT!" YOUR SAFETY IS INVOLVED.

It is your responsibility as an owner, operator, or supervisor to know and instruct everyone using this BeltVeyor at the time of initial assignment and at least annually thereafter, of the proper operation, precautions, and work hazards which exist in the operation of this BeltVeyor in accordance with OSHA Regulations.

Safety Is No Accident

The following safety instructions, combined with common sense, will save your equipment from needless damage and the operator from unnecessary exposure to personal hazard. Pay special attention to the caution notes in the text. Review this manual at least once each year with new and/or experienced operators.

1. Read and understand the operator's manual before operating this BeltVeyor. Failure to do so is considered a misuse of the equipment.
2. Make sure BeltVeyor is secure before operating.
3. Always keep children away from BeltVeyor when operating.
4. The motor controls and reset button must be located so that the operator has a full view of the entire operation.



5. During regular operation of the BeltVeyor, one person should be in a position to monitor the operation. A second person should always be nearby to shutdown the BeltVeyor in case of an emergency.
6. Make sure everyone that is not directly involved with the operation is out of the work area before beginning the operation.
7. Keep the work area clear of grease, oil, water, and other objects that could cause a slip or a fall.
8. Make sure all safety devices, shields, and guards are in place and are functional before beginning the operation.
9. Shut off power to adjust, service, or clean the BeltVeyor.
10. Keep hands, feet, and clothing away from moving parts. It is a good idea to remove all jewelry before starting the operation.

11. Visually inspect the BeltVeyor periodically during operation for signs of excessive vibration, loose fasteners, and unusual noises.

Electric Safety

1. Electric motors and controls should be wired by a qualified electrician and meet all standards set by Federal, State, and Local Electrical Codes.
2. Make certain electric motors are grounded.
3. A magnetic starter should be used to protect your motor.
4. Your motor must have a manual reset button.
5. Electrical power must be disconnected before resetting your motor.
6. A main power disconnect switch, with the ability to be locked in the off position, should be provided. The switch should be locked in the off position whenever work is to be done on the BeltVeyor or the BeltVeyor is going to be left unattended.
7. Disconnect power before resetting motor overload.

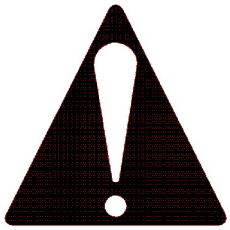

CAUTION

1. Read and understand instruction manual before operating.
2. Keep all safety shields and devices in place.
3. Make certain everyone is clear before operating machine.
4. Keep hands, feet, and clothing away from moving parts.
5. Shut off power to adjust, service, or clean.
6. Make sure machine is secured before operating.
7. Disconnect power before resetting motor overload.
8. Make certain electric motors are grounded.

DANGER: Indicates an imminently hazardous situation which, if not avoided, will result in death or serious injury. 

WARNING: Indicates a hazardous situation which, if not avoided, could result in death or serious injury. 

CAUTION: Indicates a potentially hazardous situation which, if not avoided, may result in minor or moderate injury. 

NOTICE: Used to address practices not related to physical injury. 

Safety Decals

REMEMBER: If Safety signs have been damaged, removed, become illegible or parts replaced without decals, new decals must be applied. New decals are available from your authorized distributor or factory. Individual decals shown below.

#05373600

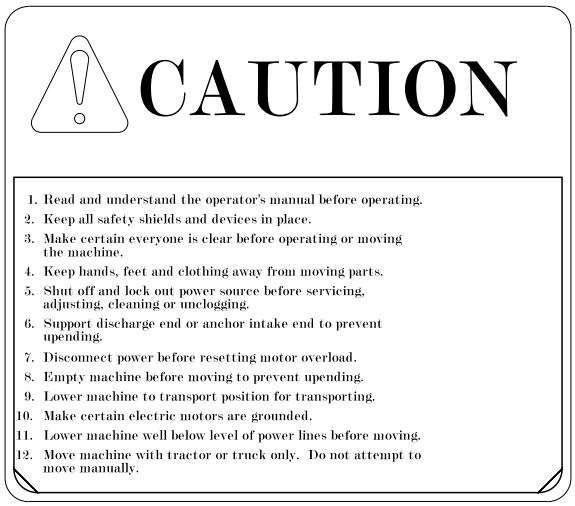

#608000

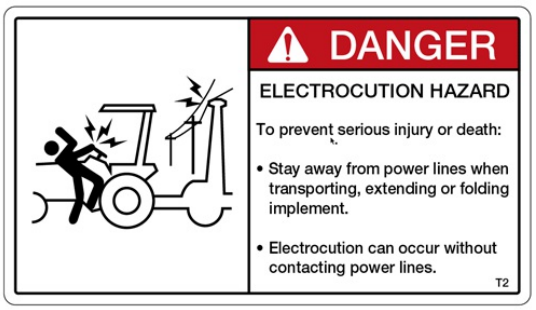

#608018



#05374400



#05375100



Decal Locations

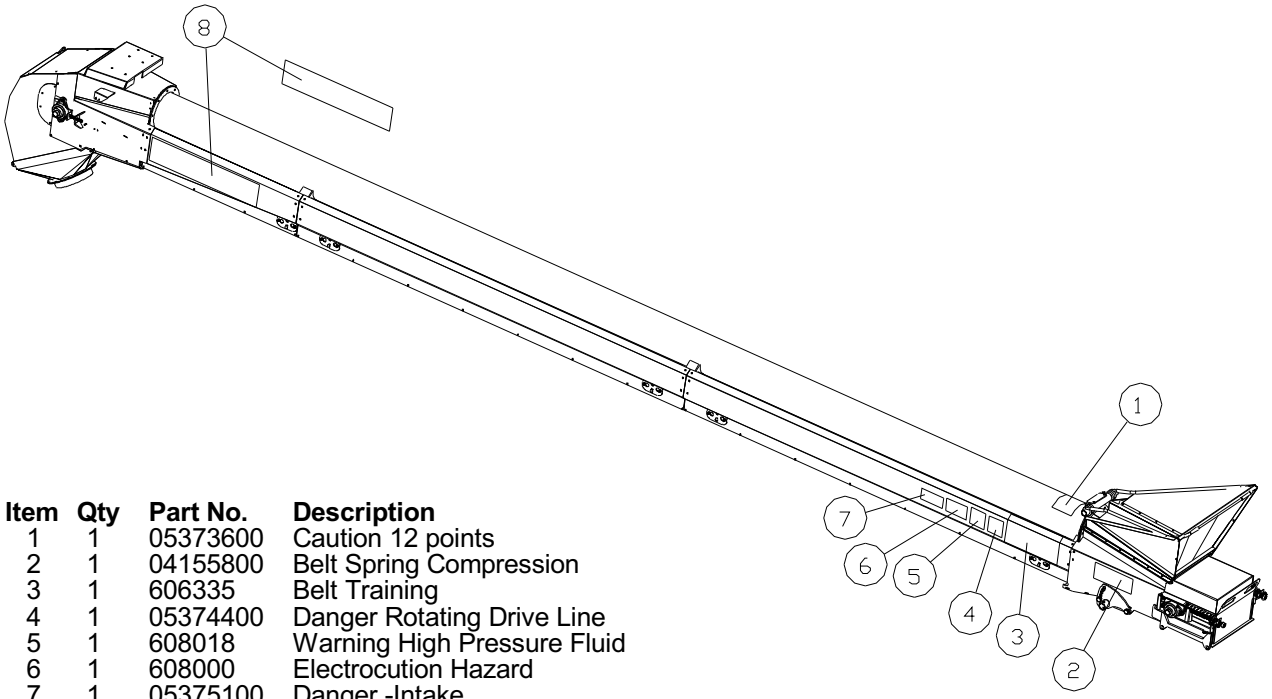

Item	Qty	Part No.	Description
1	1	05373600	Caution 12 points
2	1	04155800	Belt Spring Compression
3	1	606335	Belt Training
4	1	05374400	Danger Rotating Drive Line
5	1	608018	Warning High Pressure Fluid
6	1	608000	Electrocution Hazard
7	1	05375100	Danger -Intake
8	2	01114800	Speed King

#606335

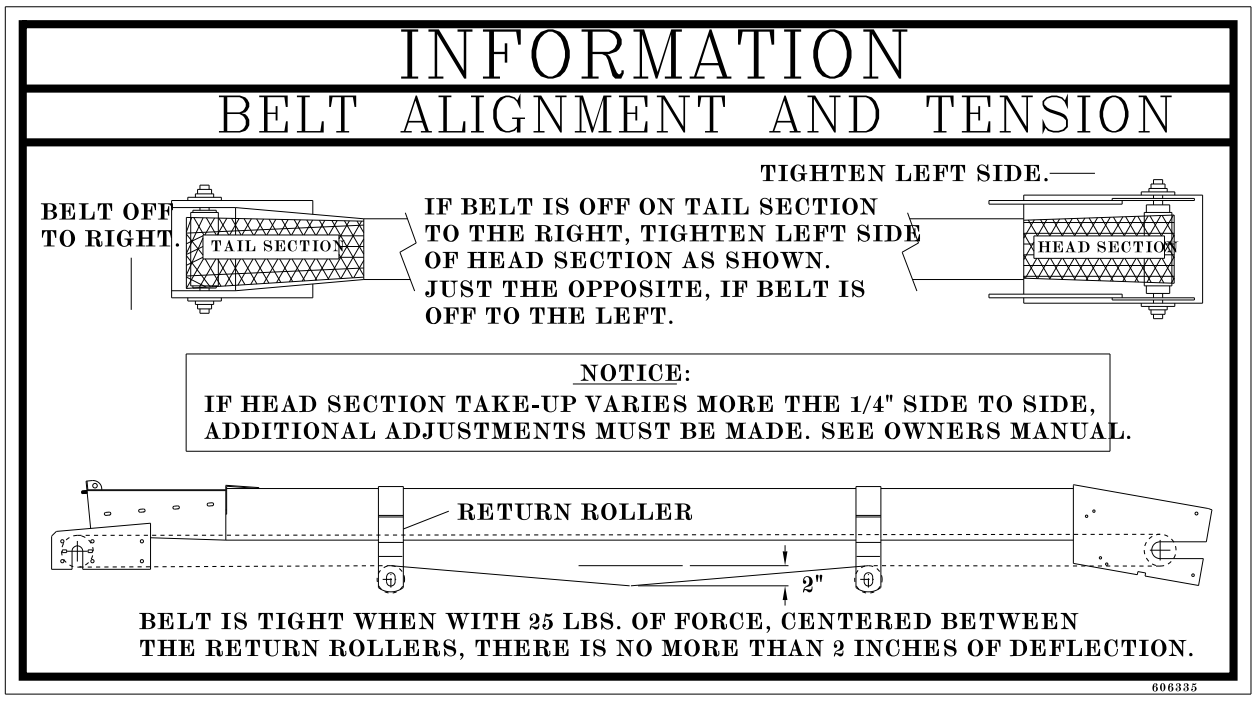

Pre-Operation Check List

1. Check all bearings for proper lubrication.
2. Check the tube for foreign material.
3. Check all belts for proper tension.
4. Start unit and check conveyor belt alignment while unit is empty.

BELT CARE ……

It is suggested that the unit be run every two to three days or more often if possible. This tends to keep the conveyor belt alive and stops any forming of the belt to the curvature of the tube while the unit is not in use.

NOTE: Belt may deteriorate if not in use and exposed to weather conditions for any prolonged period of time.

Operation Sequence

1. Check wheels to prevent movement during operation.
2. Check all drive belts for proper tension.
3. Make sure conveyor belt is properly tensioned.
4. Allow unit to run empty for a few minutes to flex conveyor belt.
5. Check conveyor belt for proper alignment.
6. Charge conveyor unit as evenly as possible. DO NOT bury intake end in material.
7. Before shutting power off, be certain unit is empty.

PTO DRIVE OPERATION ……



While operating, keep PTO shaft as straight as possible. Prolonged operation with the PTO shaft at an angle in excess of 15 degrees will reduce U-joint life. DO NOT extend PTO shaft beyond **80"** end to end.

OPERATION WITH ACCESSORIES ……

If the BeltVeyor is used with a self-powered undercar conveyor, start the BeltVeyor first and the undercar conveyor second. Reverse this procedure for shutdown.

TOWING ……



The BeltVeyor tubular conveyor is designed for maximum portability. Observe the following towing instructions for both safety and care of the unit.

1. Lower the unit to the extreme down position with slight tension on the cable.
2. Deflate tires to approximately 22 pounds.
3. Make certain the hitch is secure.
4. Be sure to follow normal towing safety precautions.

STORAGE ……

Temporary Storage

1. Relieve tension from all belts; both v-belts and conveyor belt.
2. Store all belt equipment in a dry place. If equipment cannot be stored out of the weather, cover electrical and mechanical parts with waterproof material.

Prolonged Storage

1. Remove all belts and store in a cool, dark, dry place.
2. Wash conveyor belt thoroughly.
3. Wash conveyor tube both inside and out.
4. Lubricate all bearings.
5. Lower unit to the extreme down position with slight tension on the winch cable.
6. Store all equipment in a dry shelter.

Maintenance

Preventive maintenance is the key to the long life of any mechanical device.

Careful and systematic inspection of all BeltVeyor equipment will result in maximum, trouble-free service.

BELT REPLACEMENT ……

To replace the belt, cut it into and hand rotate the drive pulley until belt has been removed. Install appropriate belt as outlined in assembly instructions. *Refer to page 12.*

DRIVE ASSEMBLY TAKE-UP ……

After extended use, the conveyor belt may stretch to the point that there is not sufficient take-up in the drive assembly to tighten it. Obtain additional take-up by cutting a 6" to 8" section from belt. A new splice lacing may be ordered from your CrustBuster/Speed King distributor or the factory.

PERIODIC CLEAN-OUT ……

Due to the characteristics of certain materials, residue sometimes collects between the conveyor belt and the tube. Check the unit periodically for any material build up in this area. If residue appears excessive, remove the conveyor belt and thoroughly wash the belt and tube. Allow belt and tube to dry before reinstalling the belt.

When conveyor is not being used, secure belt to the tube to prevent belt from flopping in the wind, possibly breaking return idlers or ripping belt.

LUBRICATION ……

All bearings which are fitted with grease zerks should be lubricated at the conclusion of each operating day. Before greasing bearings, make certain the zerks are free of dirt, otherwise this will be passed into the bearing race. If unit will be out of service for a period of time, purge bearings.

Electric motor should be oiled in accordance with the manufacturers recommendations.

Roller chains should be oiled with a light weight oil at the conclusion of each days' operation.

Keep PTO shaft and tube well greased so they move freely.

CONVEYOR BELT TRAINING PROCEDURE ……

A conveyor belt correctly installed and trained will run straight and true. The belt must run centered on all terminal pulleys, take-up pulleys, and return idlers throughout the entire belt length.

Incorrect installation and training can result in severe edge damage, material spillage, material leakage through the skirt rubber at the loading point, and excessive power demands. Material spillage is the usual reason for belt carcass ruptures and pulley cover gouging and stripping, while leakage at the skirt rubber results in excessive conveyor cover wear under the skirts.

ALIGNMENT ……

All rotating parts -head pulleys, tail pulleys, take-up pulleys, and return idlers- must be at a 90 degree angle to the direction of belt travel, must be level, and the midpoint of each centered on a line when properly aligned.

Alignment is checked by running a tight wire from center of the head pulley to center of tail pulley.

Center all other rotating parts on the wire.

Level all rotating parts. If a part is not level, the belt will run to the lower side.

Check that all parts are at a 90° or right angle to the wire. If a part is not at 90° to the center line, the belt will run to the side that if first contacts.

BELT SPLICING ……

A conveyor belt must not run out at the splice area. Runout will occur if the splice is not in alignment or correctly made.

SKIRTING & BRUSH……

Maintain skirtboards and brush to prevent spillage of grain.

Maintenance

BELT TENSIONING …….

Proper belt tension is achieved when the compression springs are compressed 1" to 1 1/8".

No compression

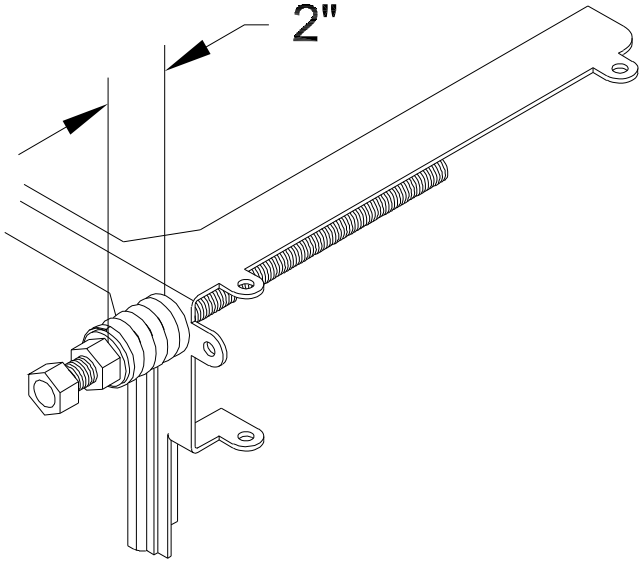

Optimal compression

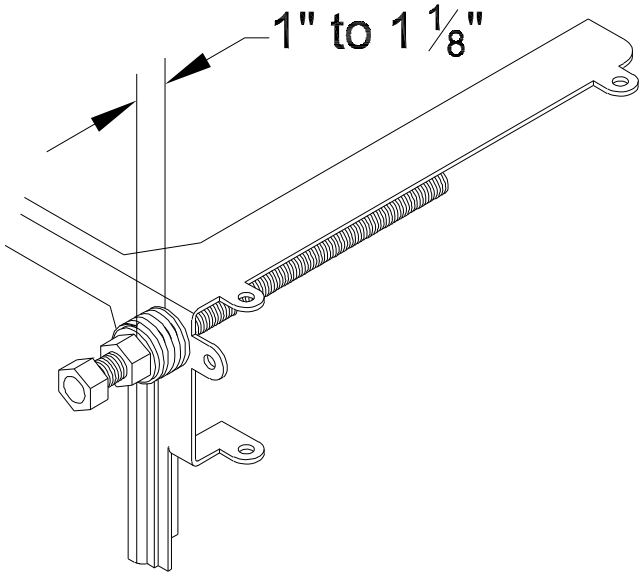

BELT TRAINING …….

It is essential that the belt be properly trained at all times. For this reason, all rotating parts should always be at right angles to the tender belt.

Slight adjustment of head roller shaft may be required to keep belts centered on them i.e., if the belt runs to one side of the roller - apply more tension to this side of the belt by advancing the roller shaft on this side.

A belt correctly installed will usually train well both empty and loaded, except as noted:

1. One or more rotating parts not in alignment.
2. Belt tensions in some part of system (usually at tail section) are below minimum recommended.
3. Belt not loaded centrally.

When a belt is initially started, it should be jogged around the system to determine if a major runout occurs which could damage belt and belt edges.

After the belt is trained empty, the belt should be trained with a load. The take-up adjustments are made to prevent belt slip and keep tensions at all points above minimums recommended when belt is operating with a load.

If slip occurs under load, additional belt tension should be applied by adjusting the take-up only enough to prevent slip from occurring under load, and when started with a load. After additional tension is added, the alignment should be checked again and adjusted accordingly.

Troubleshooting

If the BeltVeyor equipment malfunctions, the source of faulty operation may frequently be found by observing the nature of the fault and applying some simple checks and remedies to correct the malfunction. The following troubleshooting table is provided for this purpose.

BELTVEYOR TROUBLESHOOTING GUIDE

	TROUBLE	POSSIBLE CAUSES	REMEDY
1.	Conveyor belt not running at operational RPM.	▸ Engine or motor not developing operational RPM.	Correct power source problem.
		▸ Loose v-belts.	Adjust v-belt tension.
		▸ Foreign matter on conveyor belts or pulleys.	Clean belt and/or pulleys.
		▸ Conveyor belt not tensioned properly.	Tighten conveyor belt.
		▸ Lagging worn off of drive pulleys.	Replace lagging or pulleys.
		▸ Material build up around intake end of tube.	Clean area under intake.
		▸ Is belt upside down?	Make certain smooth side of belt is running against tube. If not, turn belt over.
		▸ Frozen bearings.	Replace or lubricate bearings.
2.	Normal capacity cannot be obtained.	▸ Engine or motor not developing operational RPM.	Correct power source problem.
		▸ Loose v-belts.	Adjust v-belt tension.
		▸ Foreign matter on conveyor belts or pulleys.	Clean belt and/or pulleys.
		▸ Conveyor belt not tensioned properly.	Tighten conveyor belt.
		▸ Lagging worn off of drive pulleys.	Replace lagging or pulleys.
		▸ Material build up around intake end of tube.	Clean area under intake.
		▸ Is belt upside down?	Make certain smooth side of belt is running against tube. If not, turn belt over.
		▸ Frozen bearings.	Replace or lubricate bearings.
		▸ Conveyor belt not tight.	Tighten conveyor belt.
3.	Belt alignment on bottom pulley.	▸ Pulleys, idlers, or drive assembly improperly aligned.	Adjust pulley and idler alignment. Drive assembly should be level with head and tail frame.
		▸ Possible build up on belts or pulleys.	Clean belt and/or pulleys.
		▸ Drive assembly improperly aligned.	Align and level drive assembly with head and tail frame.
4.	Excessive wear of lagging or pulleys.	▸ Conveyor belt not properly tensioned.	Tighten conveyor belt.
		▸ Take-up idlers excessively uneven.	Adjust take-up idlers evenly.
5.	Pulley drags or does not turn.	▸ Frozen bearings.	Lubricate or replace bearings.
6.	Material build up in tube.	▸ Loose belt or worn out material guides.	Tension belt and clean tube. If material guides are excessively worn, replace.

Dimensions

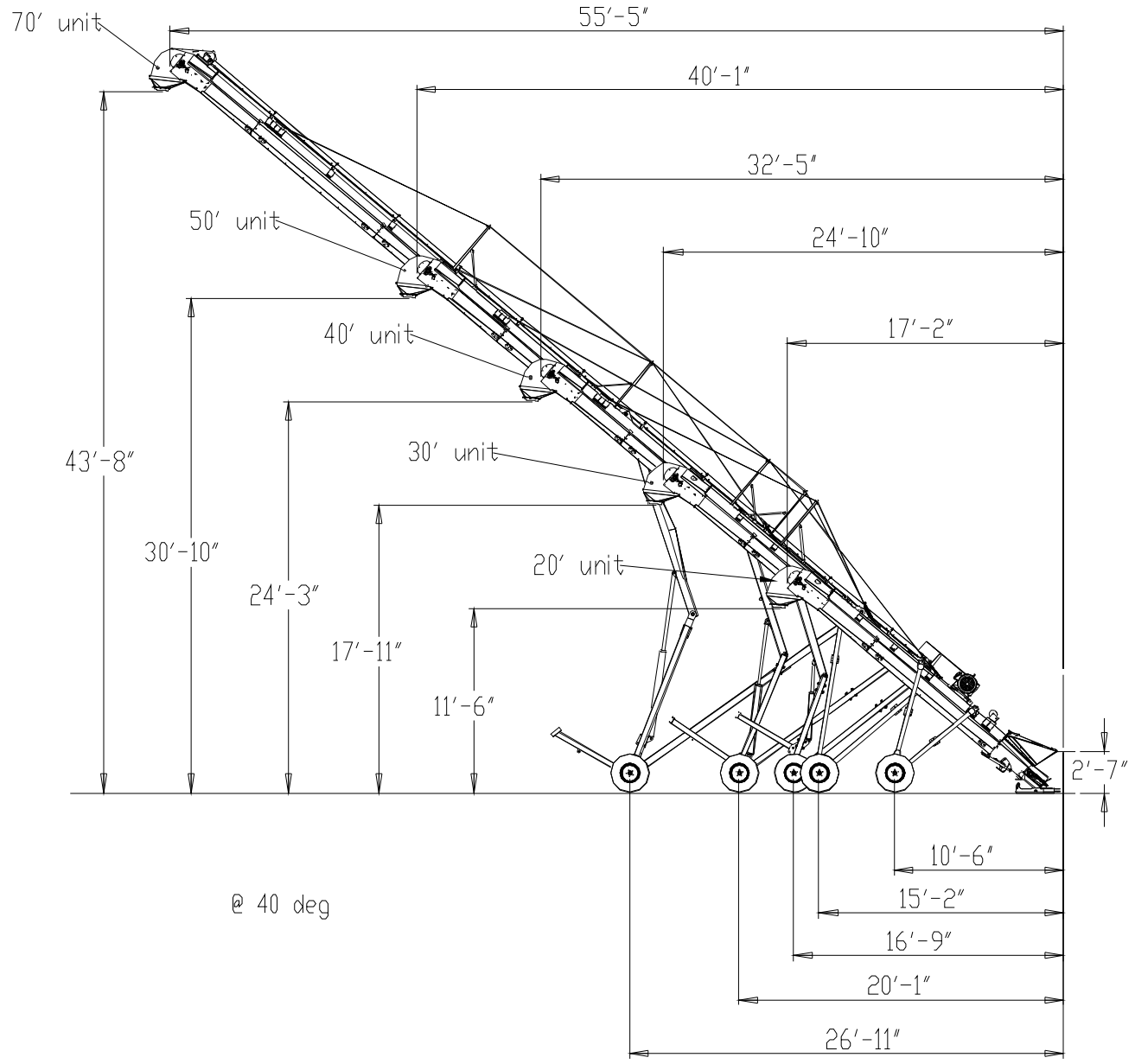
70′ unit
55′-5″
40′-1″
32′-5″
50′ unit
24′-10″
40′ unit
17′-2″
43′-8″
30′ unit
30′-10″
20′ unit
24′-3″
17′-11″
11′-6″
2′-7″
10′-6″
@ 40 deg
15′-2″
16′-9″
20′-1″
26′-11″

Winch Wrap Diagram
20' - 30'

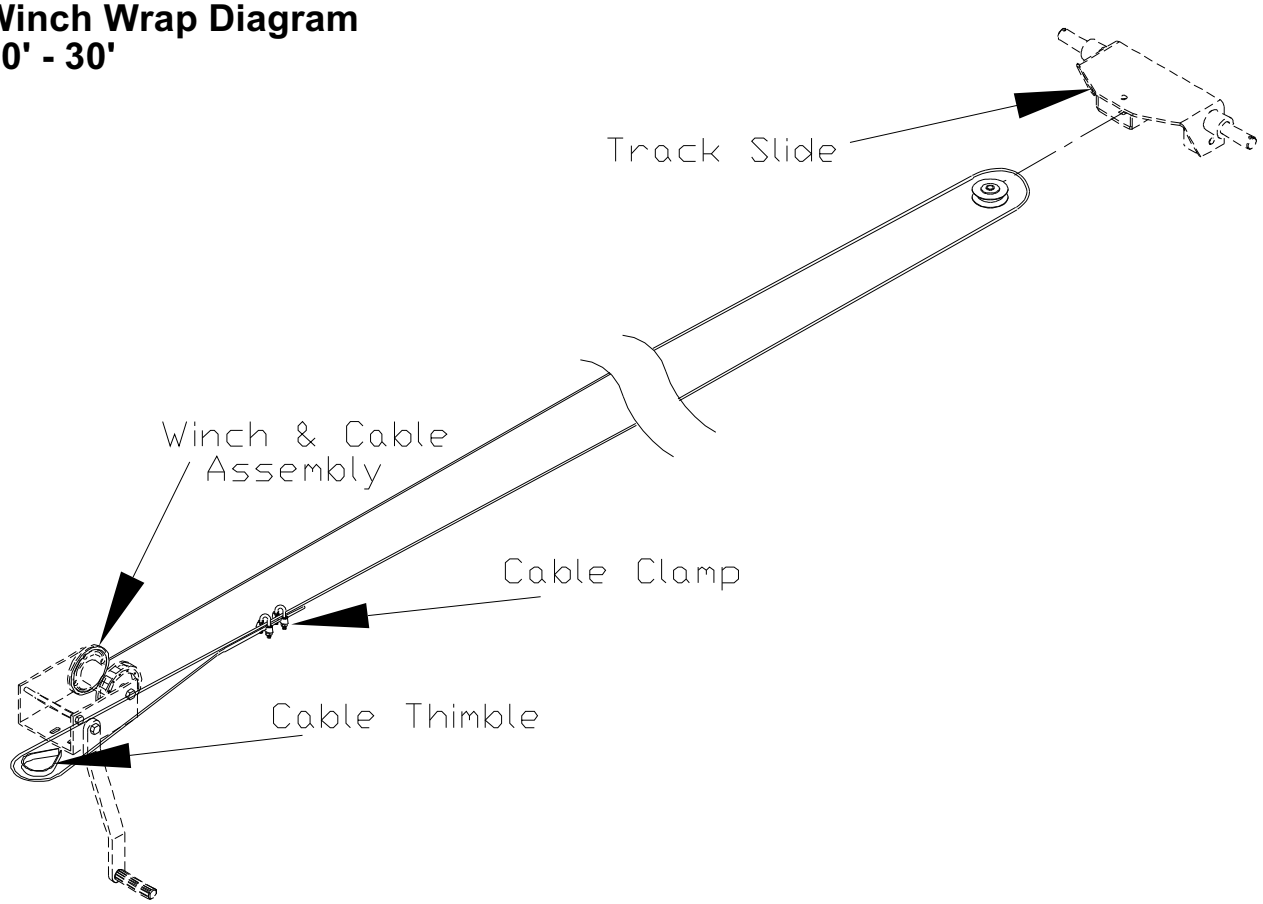

Cable Mount Diagram
40'-50'-70'

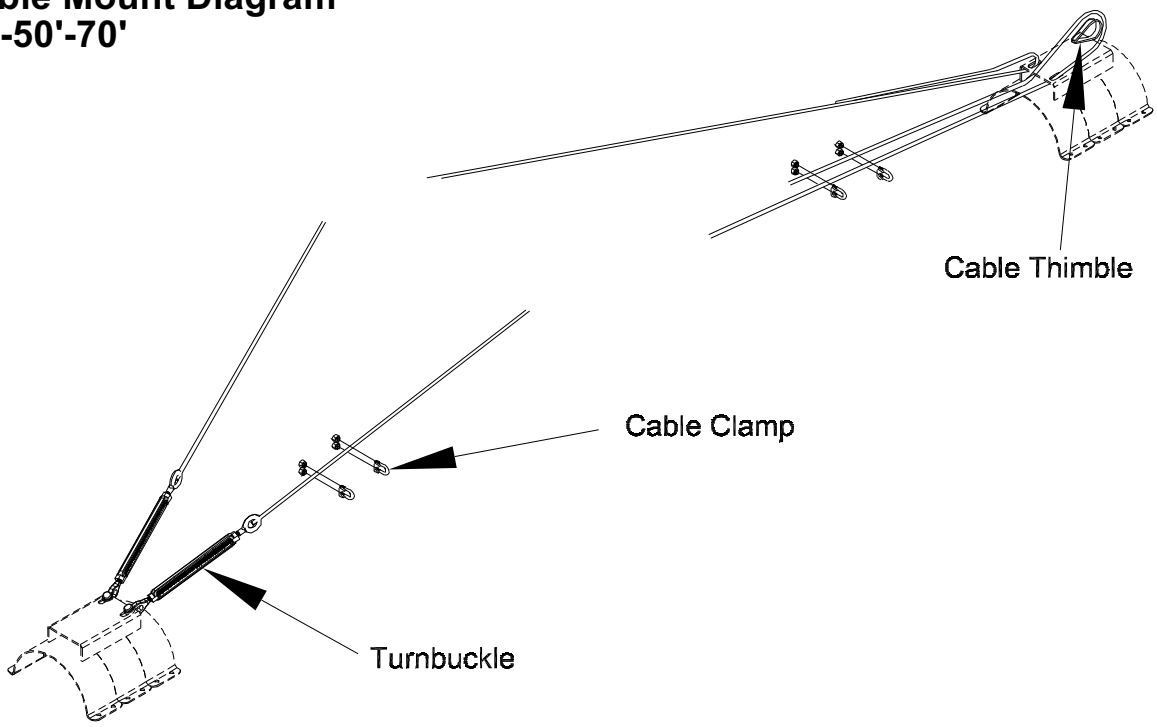

Belt Wrap & Assembly

1. Remove pan sides and bottom from tail end.
2. Using belt puller, feed belt through conveyor as shown. Hand feed belt from tail end toward other end of belt.
3. Clamp belt stretcher plates on ends of belt, leaving 2 to 3 feet between stretcher plates. Plates should be bolted tight enough to avoid belt slipping.
4. Use a device (for example- come-along) to pull belt ends together.
5. Insert cable through belt splice.

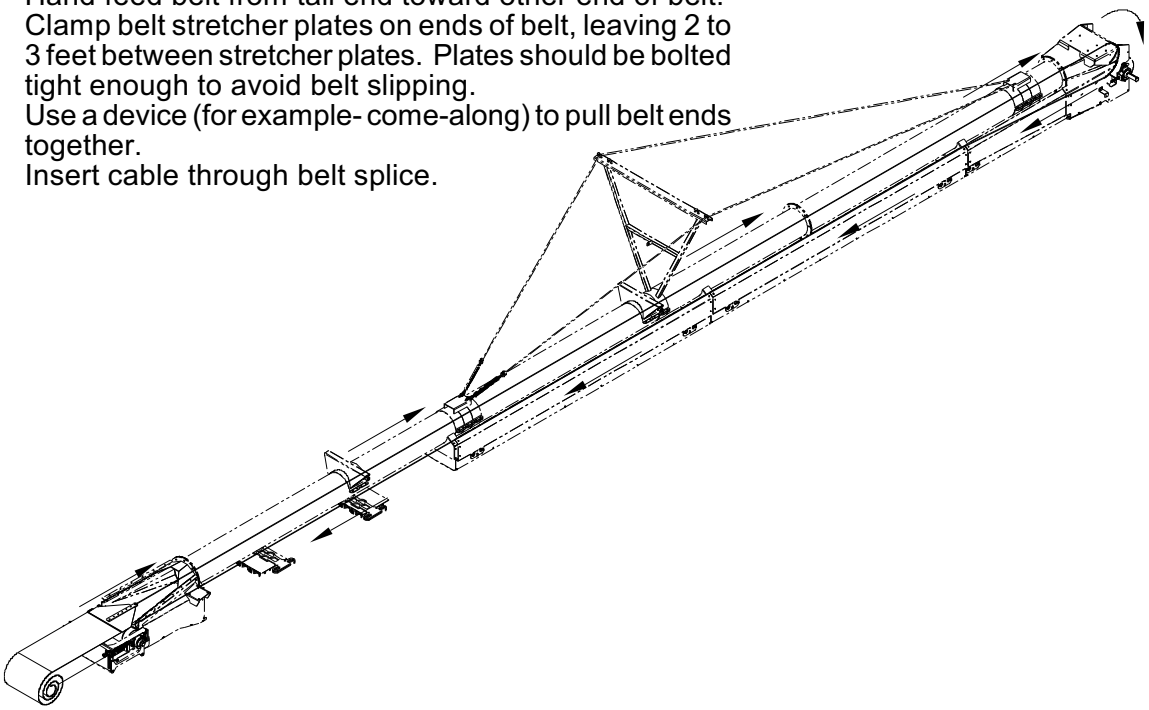

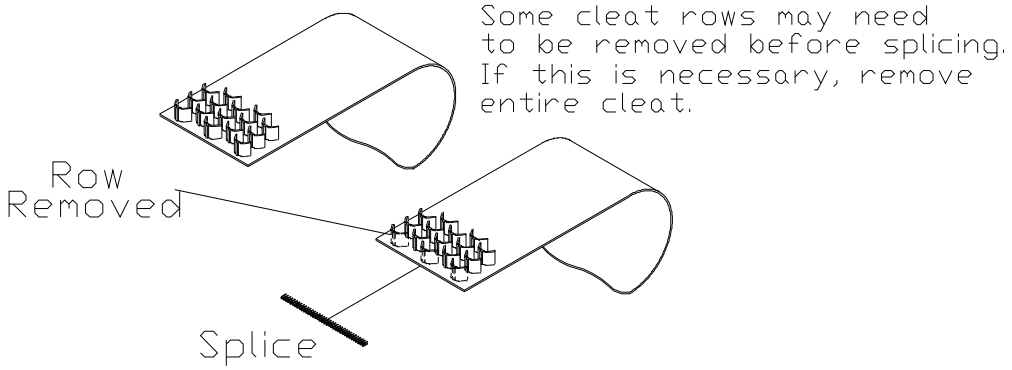

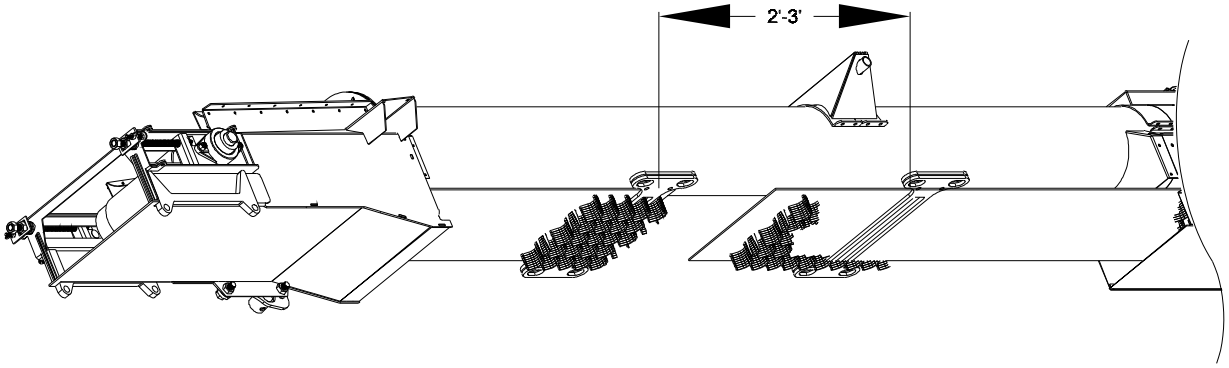

BeltVeyor Accessories

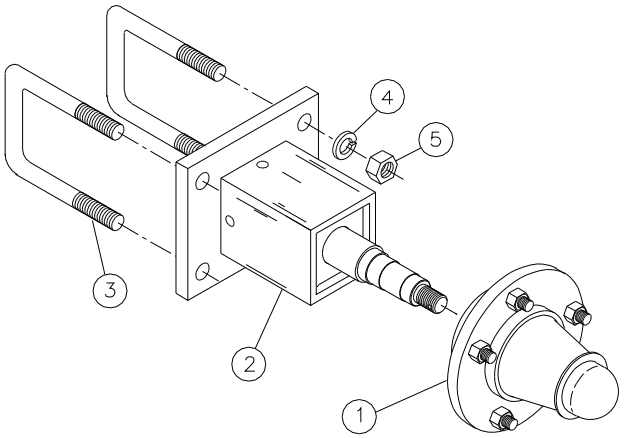

Bolt-on Spindle - 70'
#62115100

Item	Qty	Part No.	Description
1	1	551242	Hub 6 Bolt Complete
2	1	81754400	Bolt-on Spindle Weldment
3	2	331421	U-bolt 3/4" x 4" x 6"
4	4	330332	Lock washer 3/4"
5	4	330290	Hex nut 3/4"

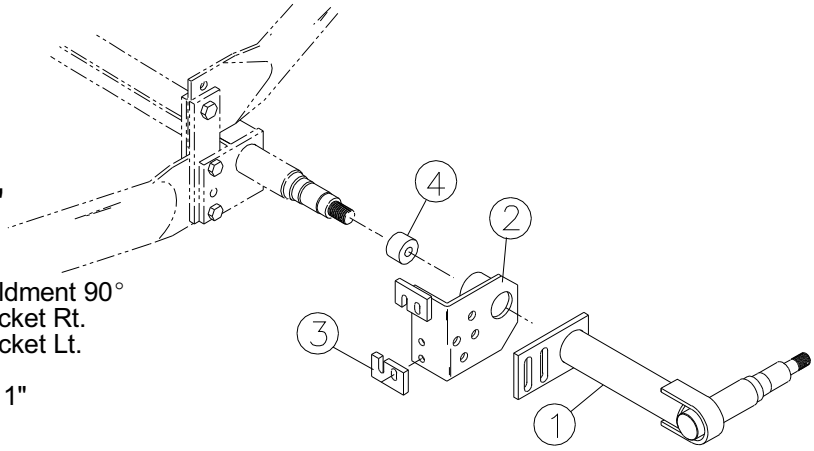

90° Spindle -20'-30'-40'-50'
#60353000

Item	Qty	Part No.	Description
1	2	83261800	Swivel Axle Weldment 90°
2	1	83260000	Attachment Bracket Rt.
	1	83259200	Attachment Bracket Lt.
3	2	16125710	Connecting Ear
4	2	16310500	Spacer 1 1/2" x 1"

90° Fixed Axle -20'-30'-40'-50'
#60847100

Item	Qty	Part No.	Description
1	1	80807100	90° Fixed Axle
2	2	13928700	Attachment Bracket
3	4	335240	HHCS ½" x 1 3/4"
4	4	330159	Flat Washer ½"
5	4	331363	Hex Nylock Nut ½"

Item	Qty	Part No.	Description
6	2	551242	Hub W719 Complete Includes #7-15)
7		05702600	Seal
8		03040300	Inner Bearing
9		05707500	5-Bolt Hub
10		01580000	Wheel Nut ½-20"
11		05741400	Outer Bearing
12		02080000	Spindle & Hub Washer
13		01581800	Wheel Nut 7/8-14"
14		02154300	Cotter Pin 5/32" x 1 3/4"
15		05703400	Wheel Dust Cap

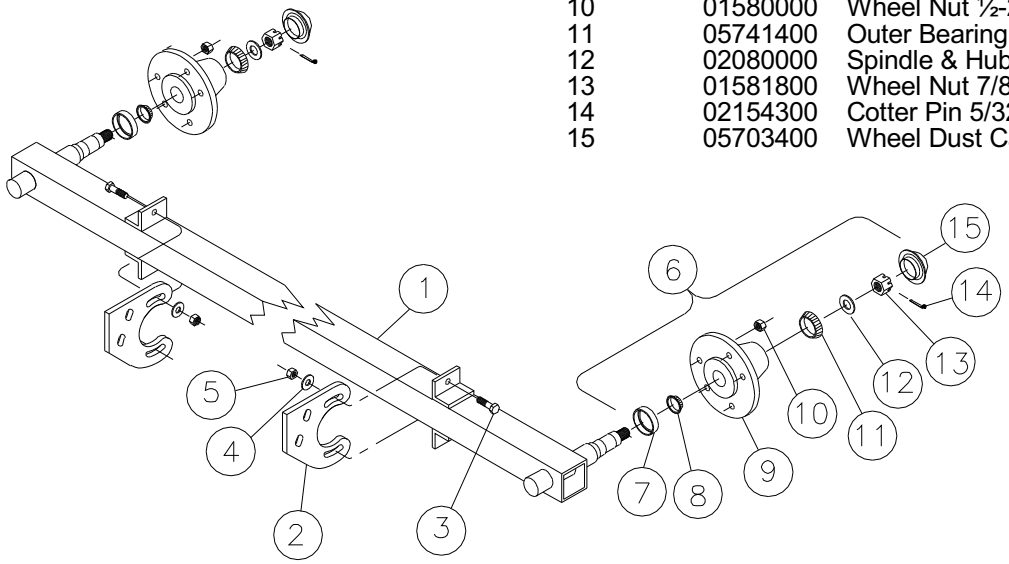

BeltVeyor Accessories

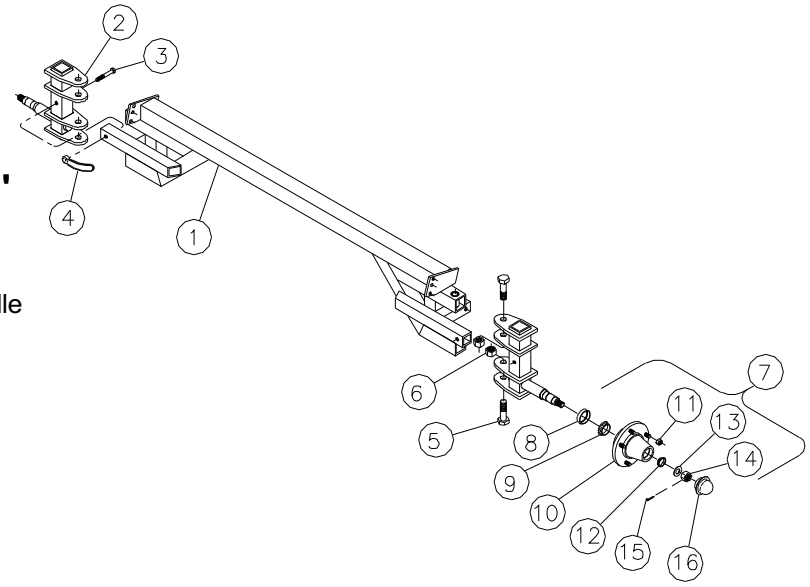

90° Swivel Axle -20'-30'-40'-50'
#62228200

Item	Qty	Part No.	Description
1	1	81846800	90°Swivel Axle
2	2	81845000	90°Swivel Axle Spindle
3	2	337352	Handle Nut ½" x 4½"
4	2	334300	HHCS ½" x 3½"
5	4	334789	HHCS 1" x 3½"
6	4	330597	Hex Nylock Nut 1"
7	2	551242	Hub W719 Complete Includes #8-16)
8		05702600	Seal
9		03040300	Inner Bearing
10		05707500	5-Bolt Hub
11		01580000	Wheel Nut ½-20"
12		05741400	Outer Bearing
13		02080000	Spindle & Hub Washer
14		01581800	Wheel Nut 7/8-14"
15		02154300	Cotter Pin 5/32" x 1
16		05703400	Wheel Dust Cap

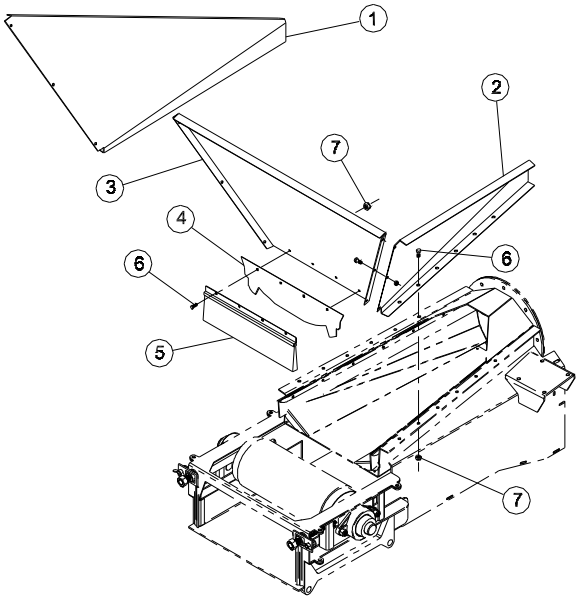

Steel Hopper - All units
#63099600

Item	Qty	Part No.	Description
1	1	30219000	Hopper Side Left
2	1	30220800	Hopper Side Right
3	1	30216600	Hopper End
4	1	30217400	Belt Plate
5	1	62978200	Brush Assembly
6	22	01057900	HHCS 1/4 x 3/4
7	22	330522	Nylock 1/4

Belt Puller Kit
#63122600

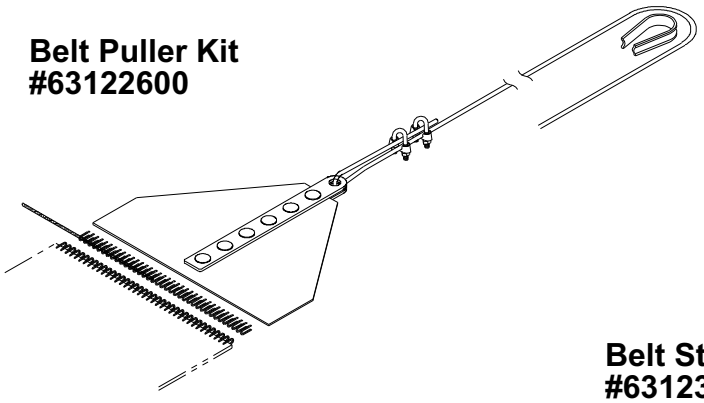

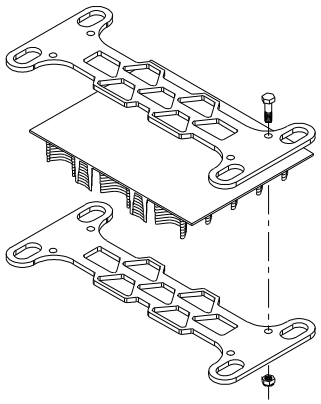

Belt Stretcher Kit
#63123400

BeltVeyor Repair Parts

Flex Hopper - All Units
#62997200

Item	Qty	Part No.	Description
1	1	62996400	Spring Mount Assembly
2	1	82778200	Hopper Arm
3	1	04070900	Canvas
4	1	30310700	Hopper Side Left
5	1	30311500	Hopper Side Right
6	1	30312300	Back up Strap
7	1	30309900	Hopper Back
8	1	30217400	Belt Plate
9	1	62978200	Brush Assembly
10	16	01057900	HHCS 1/4 x 3/4
11	16	330522	Nylock 1/4

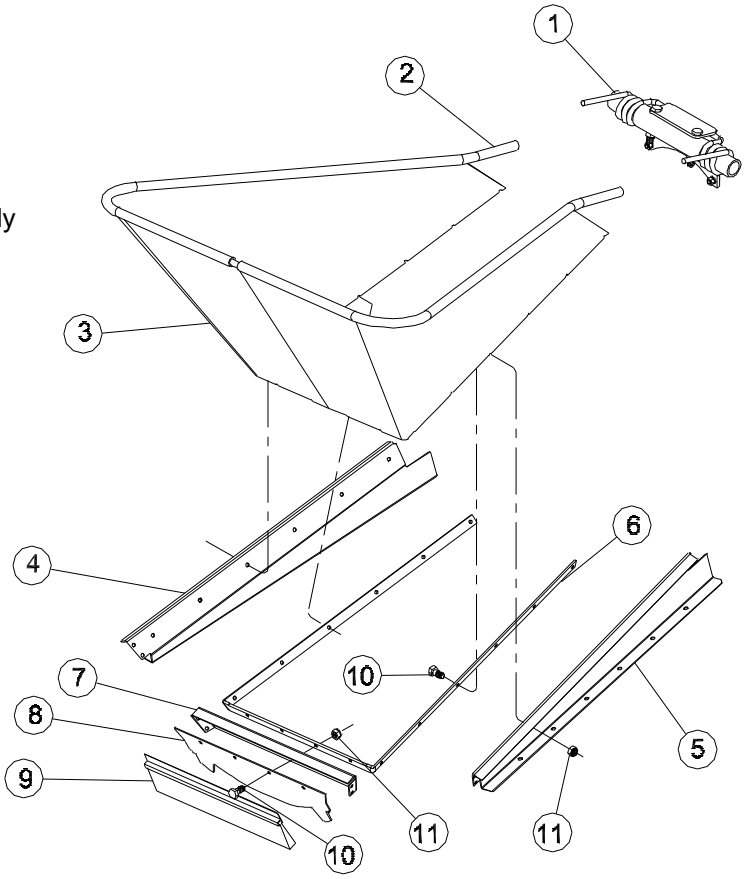

Tail Assembly - All Units
#62951900

Item	Qty	Part No.	Description
1	1	82707100	Tail
2	2	82790700	Take-up Bracket
3	2	03103900	Bearing 1½" 2 Bolt Flange
4	4	01137900	Carriage Bolt ½" x 2½"
5	4	331363	Nylock ½"
6	2	01370600	Square Nut 3/4-10
7	8	01017300	HHCS 3/8 x 1
8	1	62952700	Lagged Roller 6"
9	1	82721200	Door Mount
10	2	04132700	HHCS 3/8 x 2 3/4
11	12	330837	Nylock 3/8
12	2	15101900	Take-up Guide
13	2	334847	Wing Nut 3/8
14	2	82743600	Take-up Bolt 3/4 x 19 1/4
15	4	02176600	Flat Washer 3/4 SAE
16	2	04150910	Compression Spring
17	1	82722000	Jack Rotation Plate
18	2	02306900	HHCS 3/4 x 1 1/4
19	2	330332	Lock Washer 3/4

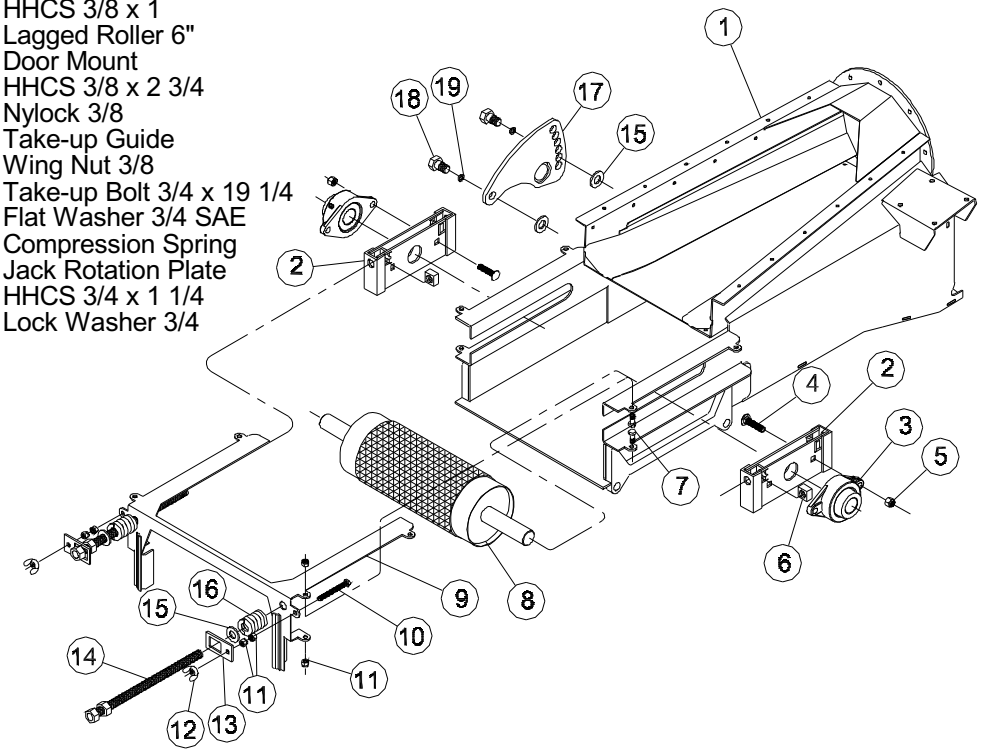

BeltVeyor Repair Parts

Head Assembly - 8" Roller #63087100

Item	Qty	Part No.	Description
1	1	82744400	Head -8" Roller
2	1	62979000	Lagged Roller 8"
3	2	82761800	8" Roller Cap
4	2	30316400	Bearing Plate
5	2	80661200	Take-up Bolt ½" x 4½"
6	4	330134	Hex Nut ½"
7	2	03103900	Bearing 1½" 2bolt flange
8	4	01140300	Carriage Bolt ½" x 2
9	4	331363	Nylock ½"
10	2	20072500	Key 3/8 x 2

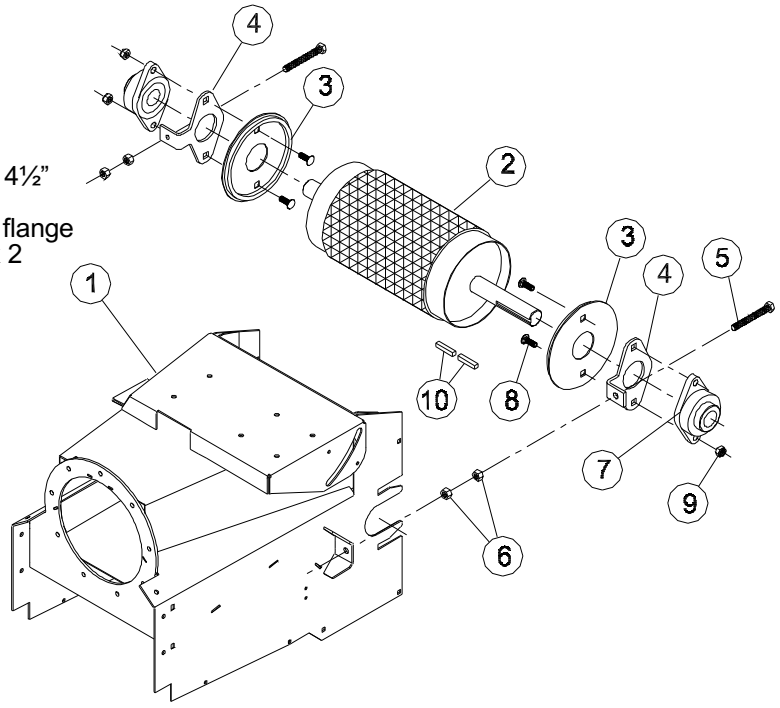

Head Assembly - 10" Roller #63086300

Item	Qty	Part No.	Description
1	1	82723800	Head -10" Roller
2	1	62959200	Lagged Roller 10"
3	2	82772500	10" Roller Cap
4	2	30316400	Bearing Plate
5	2	80661200	Take-up Bolt ½" x 4½"
6	4	330134	Hex Nut ½"
7	2	03103900	Bearing 1½" 2bolt flange
8	4	01140300	Carriage Bolt ½" x 2
9	4	331363	Nylock ½"
10	2	20072500	Key 3/8 x 2

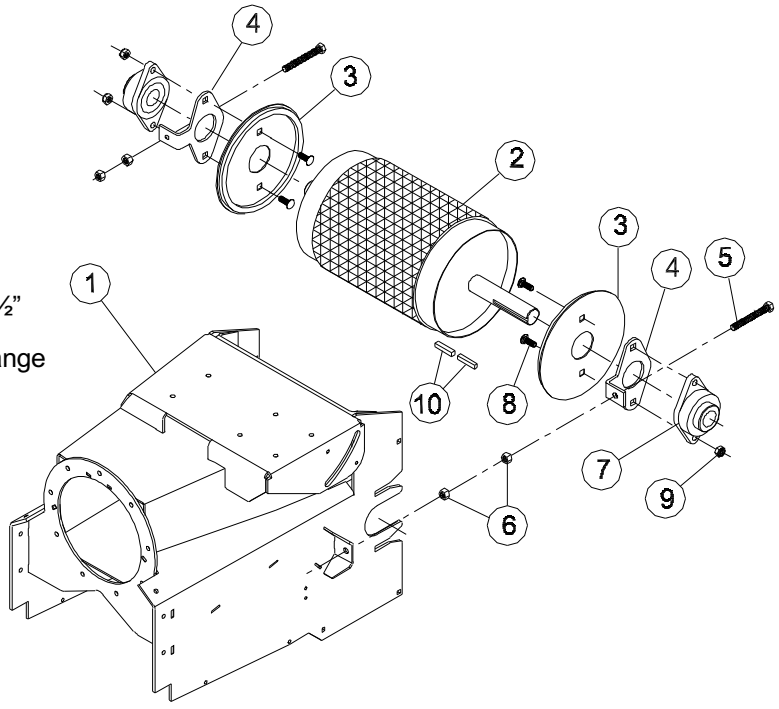

BeltVeyor Repair Parts
Tubes

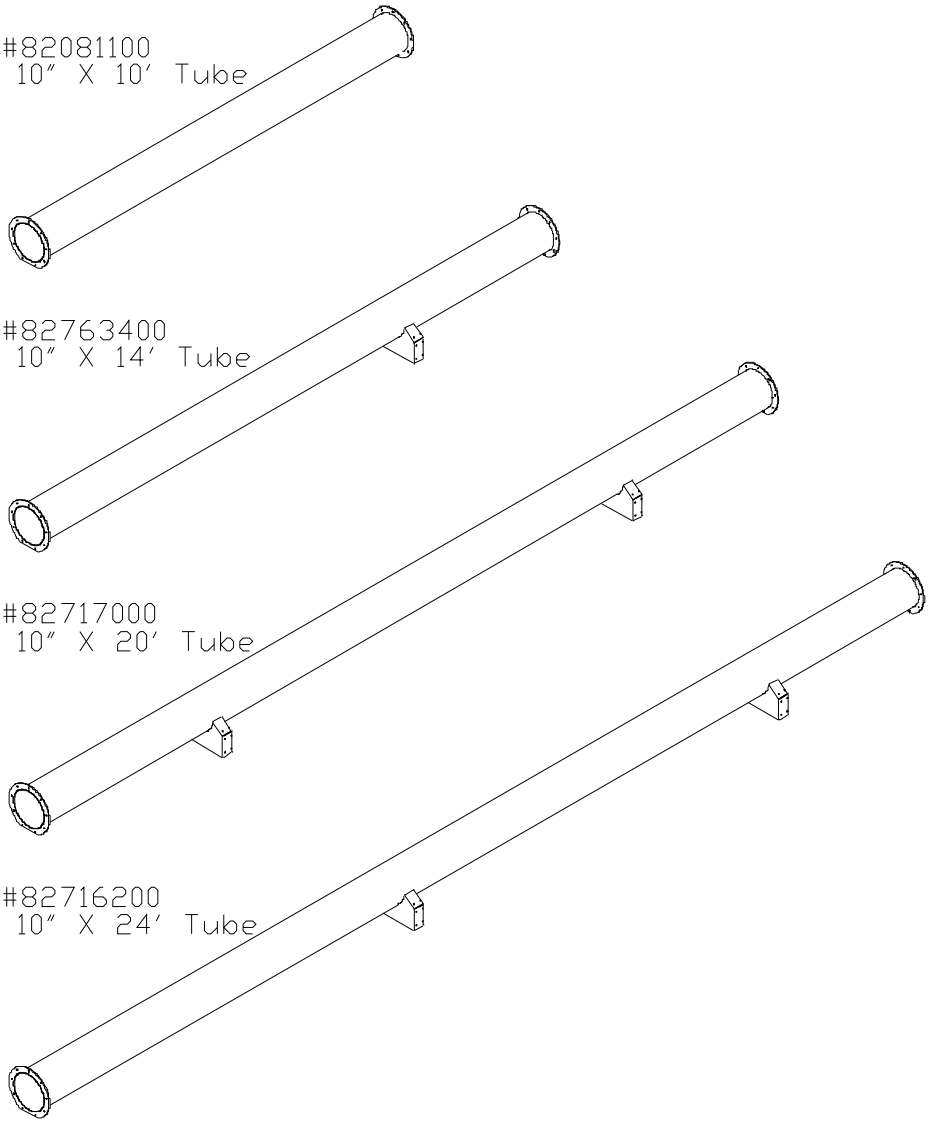

10" Half Band
#10319210

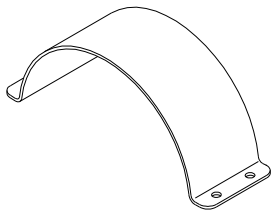

BeltVeyor Repair Parts
Hydraulic Cylinders

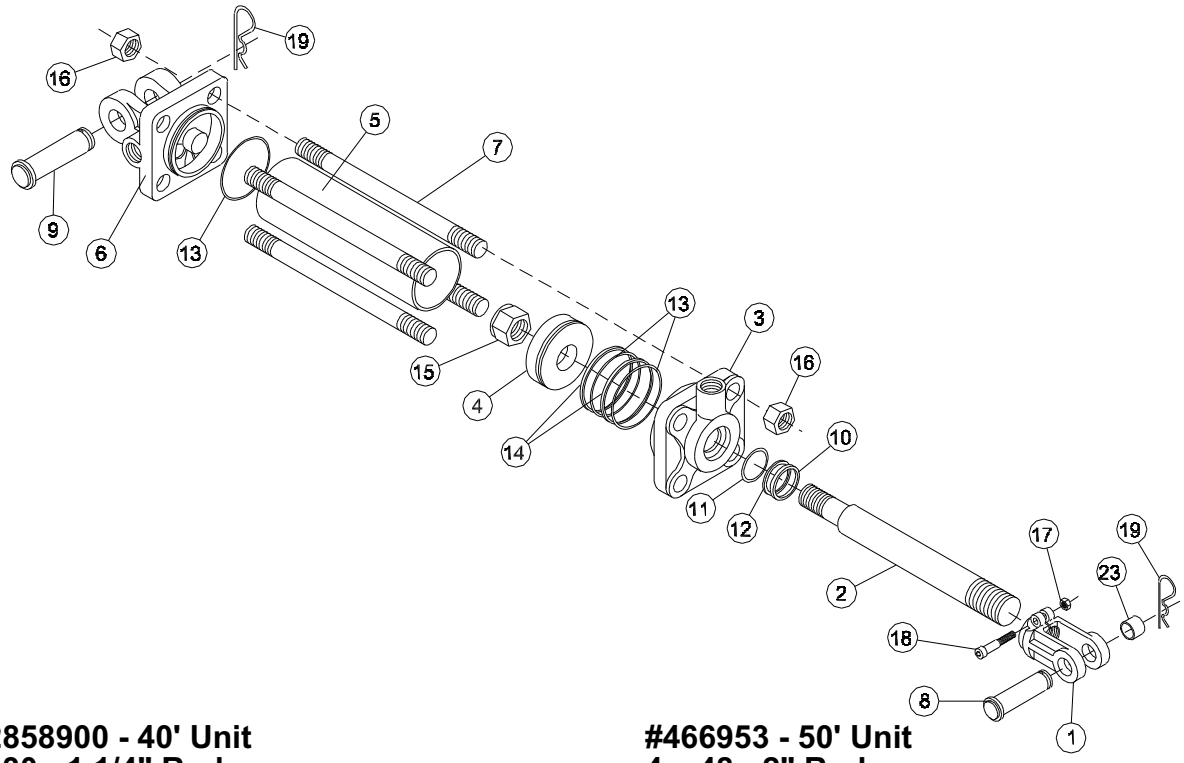

#02858900 - 40' Unit
3 x 30 -1 1/4" Rod

Item	Part No.	Description
1	461483	Clevis
2	460824	Rod
3	469726	Head
4	460964	Piston
5	461004	Tube
6	469718	Base
7	461053	Tie Rod
8	463133	Clevis Pin
9	463133	Clevis Pin
10	460329	Wiper (Rod)
11	463109	O-Ring (Rod)
12	463042	Back-up (Rod)
13	460923	O-Ring (Piston)
14	460980	Back-up (Piston)
15	460394	Nut (Piston)
16	460972	Nut (Rod)
17	460691	Nut (Clevis)
18	460477	Capscrew
19	460469	Clip Pin
	461079	Seal Kit

#466953 - 50' Unit
4 x 48 -2" Rod

Item	Part No.	Description
1	---------	Clevis
2	466979	Rod
3	461152	Head
4	461269	Piston
5	466987	Tube
6	461368	Base
7	466995	Tie Rod
8	463133	Clevis Pin
9	463133	Clevis Pin
10	461160	Wiper (Rod)
11	461178	O-Ring (Rod)
12	463075	Back-up (Rod)
13	461186	O-Ring (Piston)
14	461277	Back-up (Piston)
15	461285	Nut (Piston)
16	461442	Nut (Rod)
17	460691	Nut (Clevis)
18	460477	Capscrew
19	460469	Clip Pin
	461848	Seal Kit

#474049 - 70' Unit
5 x 60 -2½" Rod

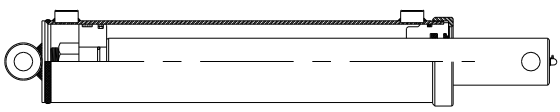

20' BeltVeyor

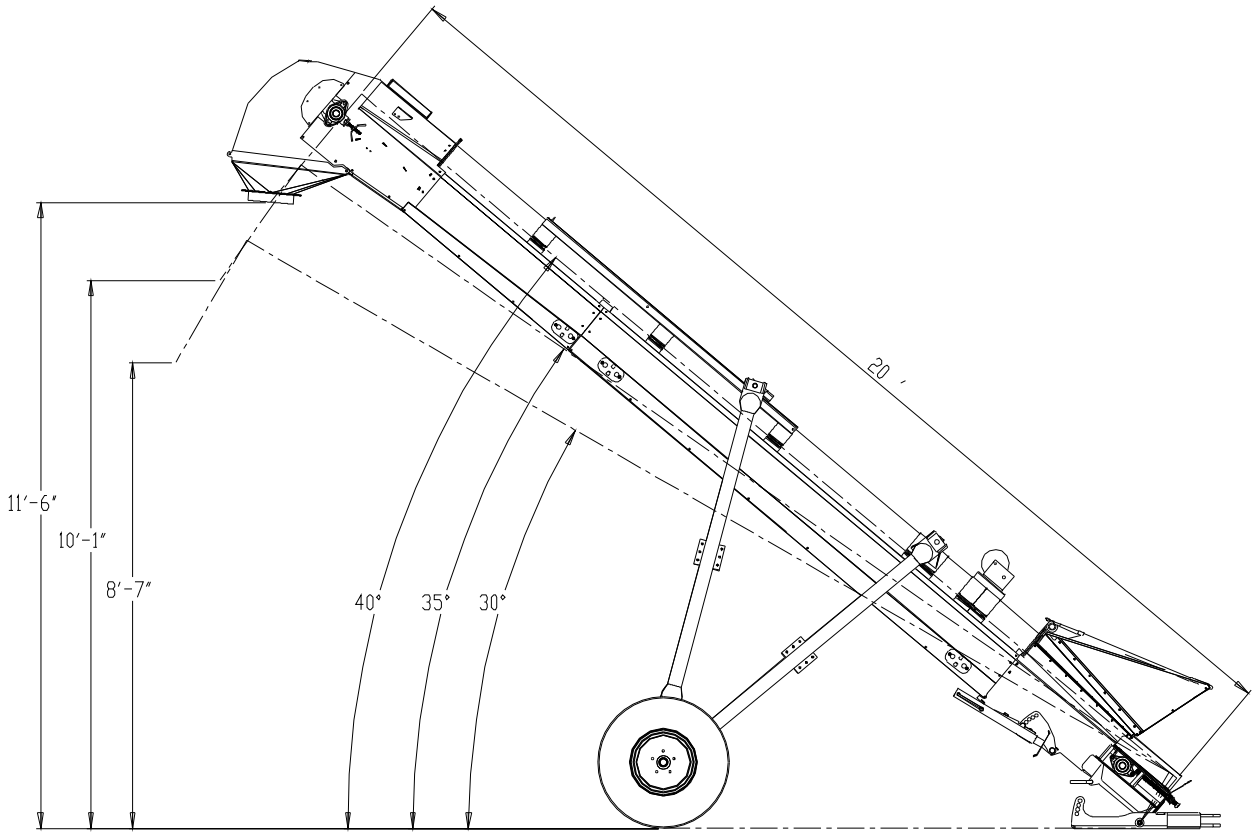

20'-16" Honeycomb Belt				20'-16" Crescent Belt			
ft/min	angle	bu/hr	hp	ft/min	angle	bu/hr	hp
389	30	3000	4.4	389	27	2700	4.0
389	35	2750	4.6				
389	40	2500	4.8				
474	30	3574	4.8	474	27	3050	4.8
474	35	3276	5.0				
474	40	2979	5.2				
576	30	4264	5.4	576	27	3410	5.0
576	35	3908	5.6				
576	40	3553	5.8				
728	30	5291	6.2	728	27	3800	5.7
728	35	4850	6.4				
728	40	4409	6.7				
833	30	6000	6.7	833	27	3950	6.0
833	35	5500	7.0				
833	40	5000	7.3				

All bu/hr was done with 60 lb/bu wheat @ 12%-15% moisture

Undercarriage -	sliding
Available drives -	Electric
	Hydraulic
Electric -	7.5 hp minimum
	Use 3 phase @1800 RPM
Hydraulic -	minimum 10 gpm @2000 psi from source
	minimum 8 gpm @2500 psi from source
	do not exceed 2750 psi and 20 gpm
Drive Type -	Head drive jack-shaft style
Belt -	16" Honeycomb cleat
	16" crescent
Maximum angle -	
Crescent	27 degrees
Honeycomb	40 plus degrees

Operations above recommended angle WILL result in damage to unit.

20' BeltVeyor - Electric
Head, Tail and Pan

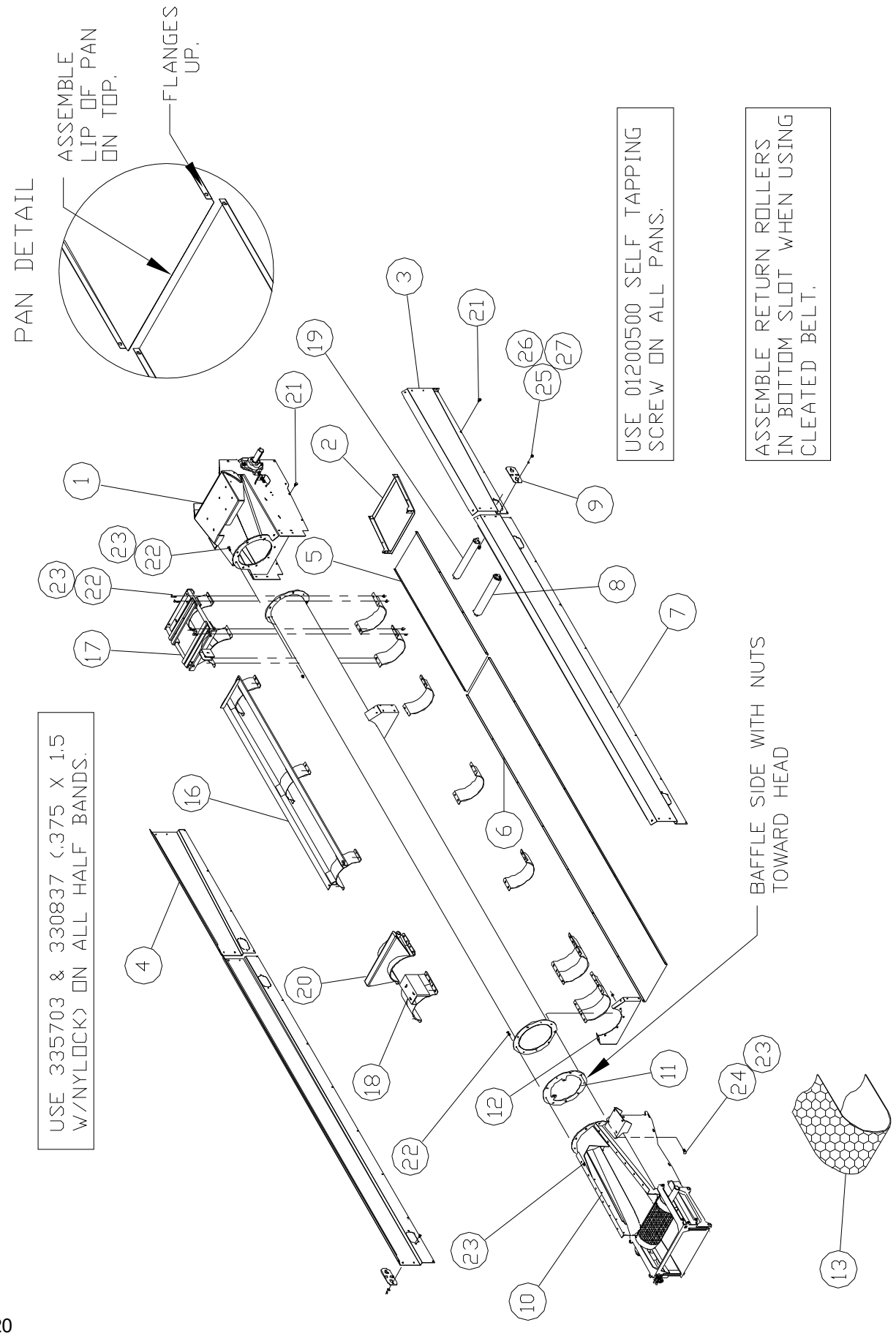

20' BeltVeyor - Electric
Head, Tail and Pan

Dimensions from end of tube to half bands.

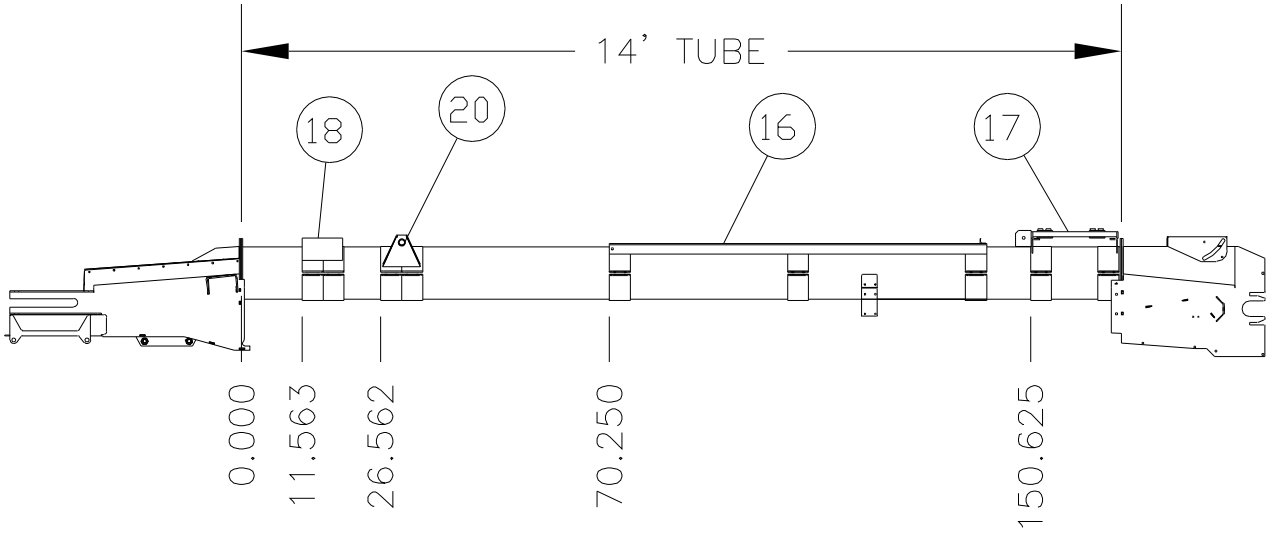

#62990700

Item	Qty	Part No.	Description
1	1	63087100	Head Assembly -8" Roller
2	1	30720700	Head Pan
3	1	30719900	Pan Side 4' Right
4	1	30161400	Pan Side 4' Left
5	1	30162200	Pan 4'
6	1	30164800	Pan 10'
7	2	30163000	Pan Side 10'
8	1	60196300	Plastic Roller 2 3/8"
9	6	30328900	Roller Slot Cover
10	1	62951900	Tail Assembly
11	1	82762600	Baffle
12	1	30731400	Tail Mount
13	1	62995600	Honeycomb Belt 16" x 39'-8"
14	1	82763400	Tube 10" x 14'
15	9	10319210	Half Band 4 x 10
16	1	81005100	6' Track
17	1	81879900	Electric Motor Mount
18	1	83100800	Winch Mount
19	1	63104400	Plastic Roller 2"
20	1	82907700	Axle Mount
21	56	01200500	Screw 5/16 x 3/4 Washer Head Self-Tap
22	52	335703	HHCS 3/8 x 1½"
23	56	330837	Nylock 3/8
24	2	332890	Carriage Bolt 3/8" x 1 3/4"
25	12	337949	Carriage Bolt 1/4 x 3/4"
26	12	02016400	Flat Washer 1/4"
27	12	330522	Nylock 1/4"

20' BeltVeyor - Electric
Conveyor Parts

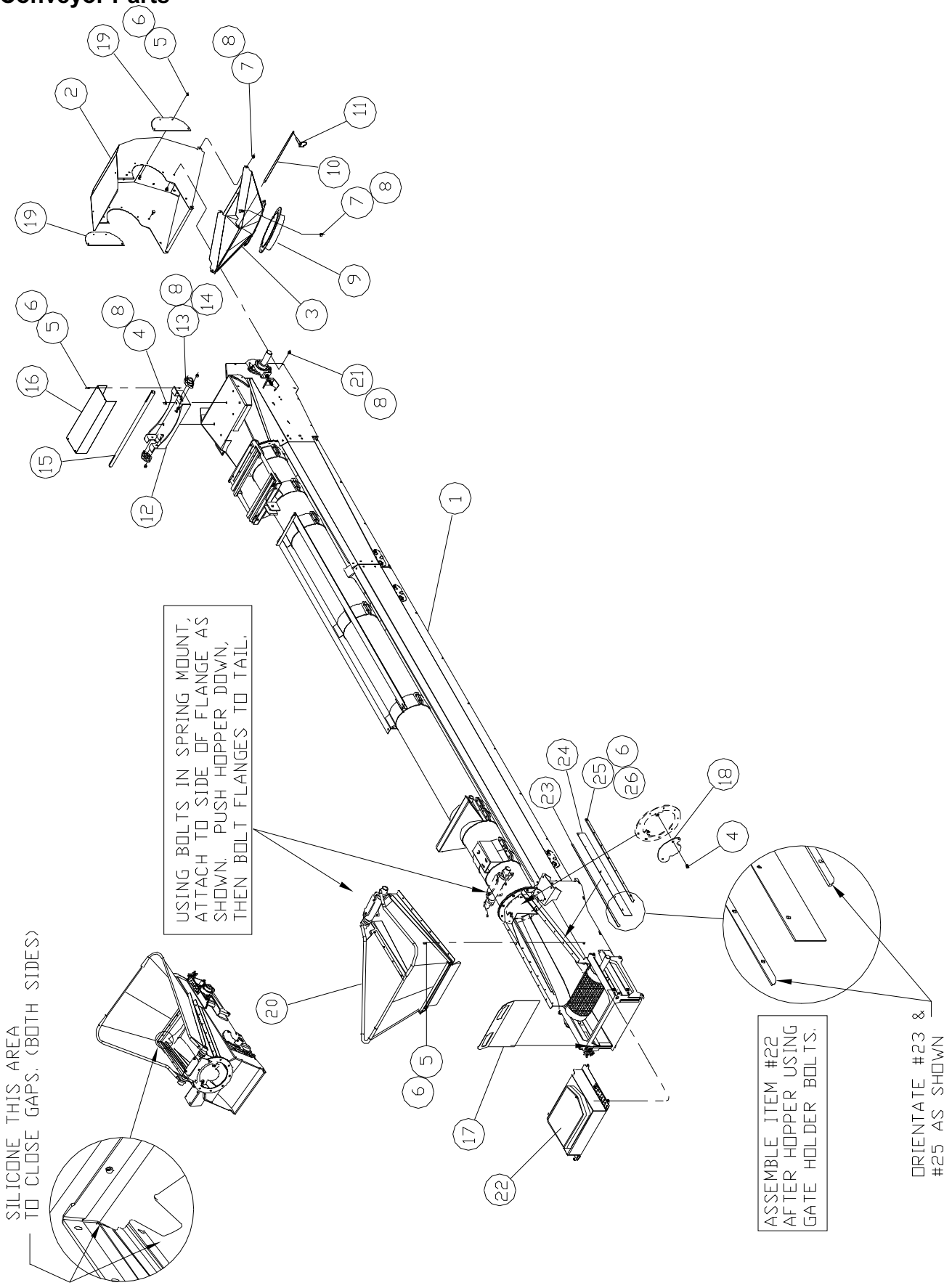

20' BeltVeyor - Electric
Conveyor Parts

#62991500

Item	Qty	Part No.	Description
1	1	62990700	Head-Tail-Tube Assembly
2	1	63022800	Spout Top w/lining
3	1	82779000	Spout Bottom -10" Round
4	6	01017300	HHCS 3/8 x 1"
5	24	01057900	HHCS 1/4" x 3/4"
6	38	330522	Nylock 1/4"
7	11	01145200	HHCS 3/8 x 3/4"
8	25	330837	Nylock 3/8"
9	1	82791500	10" Spout Tube
10	1	30302400	Spout Pin
11	2	330928	Klik Pin 3/16"
12	1	30230700	Shaft Mount
13	2	03001500	Bearing 1"
14	4	335703	HHCS 3/8 x 1½"
15	1	30291900	Drive Shaft
16	1	30231500	Shaft Cover
17	1	30204200	Tail Door
18	1	30337000	Baffle Plate
19	2	30721500	Spout Guard
20	1	62997200	Flex Hopper Assembly
21	6	330654	Carriage Bolt 3/8 x 1"
22	1	62956800	Belt Cover & Brush
23	2	30158000	Inner Skirtboard
24	2	30157200	Nylon Skirtboard
25	2	30159800	Outer Skirtboard
26	14	333633	HHCS 1/4 x 1 1/4"

20' BeltVeyor - Electric
Drive and Undercarriage

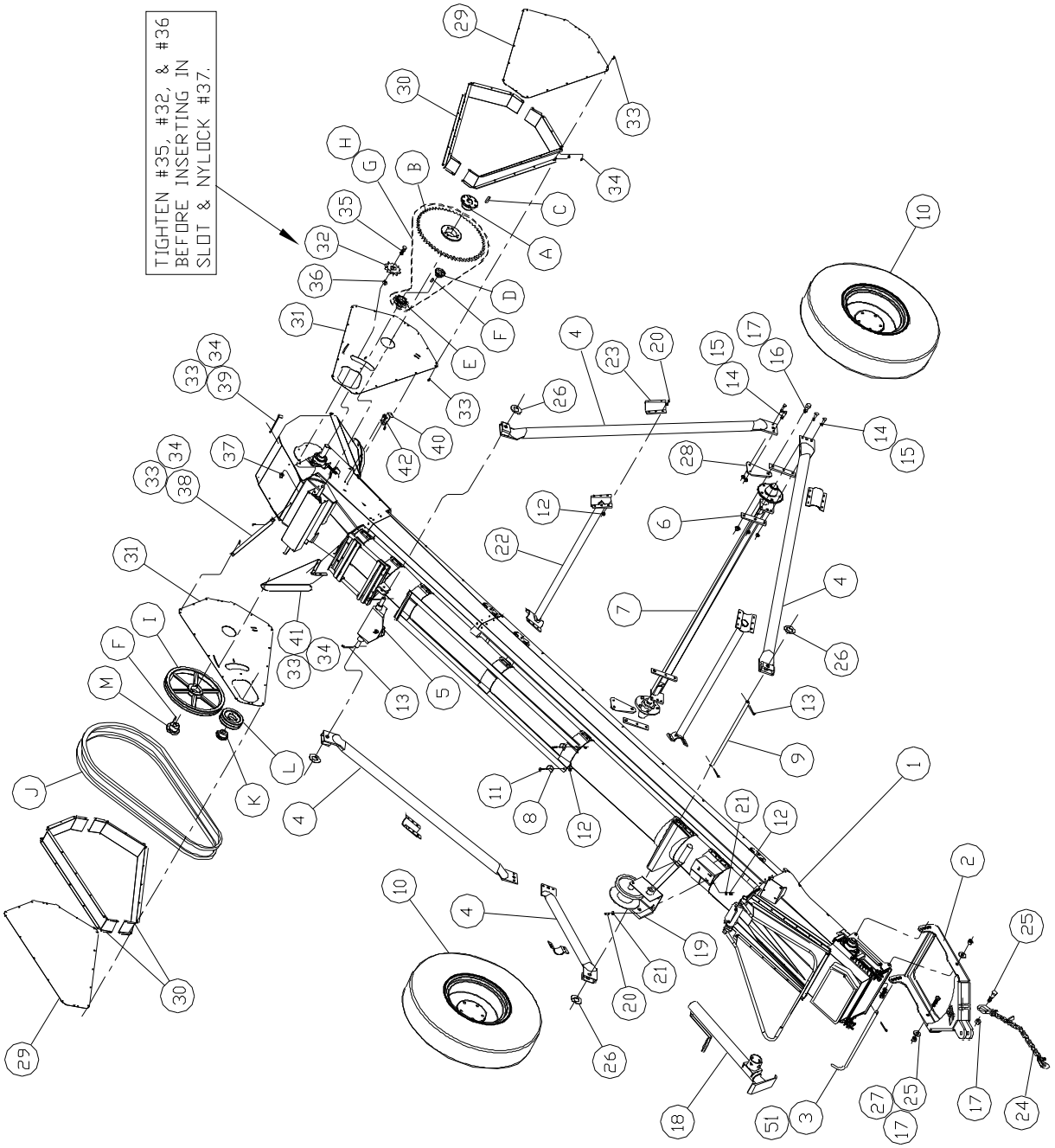

20' BeltVeyor - Electric
Drive and Undercarriage

#90872300

Item	Qty	Part No.	Description
1	1	62991500	Conveyor Assembly
2	1	82745100	Pivot Hitch
3	1	30243000	Pivot Hitch Handle
4	4	83319400	Arm 7'
5	1	61641700	Track Slide Assembly
6	4	15999600	Axle Arm Bracket
7	1	71022800	Axle Assembly
8	2	12128500	Lower Stop
9	1	30764500	Axle Arm Pin
10	2	807313	Tire & Rim 9.5L x 15 6Ply 5 bolt rim
11	2	01017300	HHCS 3/8 x 4"
12	29	330837	Nylock 3/8"
13	4	02052900	Cotter Pin 1/4 x 1½"
14	8	335422	HHCS ½ x 2½"
15	8	331363	Nylock ½"
16	2	335174	HHCS 3/4 x 1 1/4"
17	5	330316	Nylock 3/4"
18	1	531558	Jack 2000# Side Crank Bottom Mount
19	1	68040500	Winch Assembly-44'Cable
20	27	01158500	HHCS 3/8 x 1 1/4"
21	6	330894	Flat Washer 3/8"
22	2	82908500	Cross Brace 50"
23	4	15721410	Cross Brace Band
24	1	433938	Safety Chain 11,000#
25	3	02307700	HHCS 3/4 x 3"
26	4	330407	Flat Washer 1"
27	2	330340	Flat Washer 3/4"
28	2	30772800	Lift Arm Extension
29	2	30197800	Guard Cover
30	4	30198600	Guard Side
31	2	30196000	Guard Back Plate
32	1	04046900	Idler Sprocket #60-13T
33	88	01057900	HHCS 1/4 x 3/4"
34	88	330522	Nylock 1/4"
35	1	01071000	HHCS 5/8 x 2"
36	1	330571	Hex Nut 5/8"
37	1	01572700	Nylock 5/8"
38	1	30576300	Head Guard Bracket
39	1	30732200	Head Guard Bracket Top
40	1	30331300	Head Guard Bracket Side
41	1	30382600	Head Guard Bracket Front
42	2	01200500	Screw 5/16 x 3/4" Washer Head Self Tap
51	1	330928	Klik Pin 3/16"

20' Electric Drive Options

Description	#63007900 389 FPM	#63005300 474 FPM	#63006100 576 FPM	#63103700 728 FPM	#63008700 833 FPM
A- Bushing	00730200	00730200	00730200	00730200	00730200
B- Sprocket	00416800	00416800	00416800	00416800	00416800
C- Key	20072500	20072500	20072500	20072500	20072500
D- Bushing	04264800	04264800	04264800	04264800	04264800
E- Sprocket	00967000	00967000	00967000	00967000	00967000
F- Key	10490100	10490100	10490100	10490100	10490100
G- Chain	13657200	13657200	13657200	13657200	13657200
H- Connector	02044600	02044600	02044600	02044600	02044600
I- Sheave	04285300	04285300	04285300	04285300	04425500
J- V-Belt	03527900	03527900	04147500	04146700	00042200
K- Bushing	04348900	04348900	04348900	01897800	04348900
L- Sheave	04456000	04371100	04303400	04425500	04456000
M- Bushing	04332300	04332300	04332300	04332300	04332300

20' BeltVeyor - Hydraulic
Head, Tail and Pan

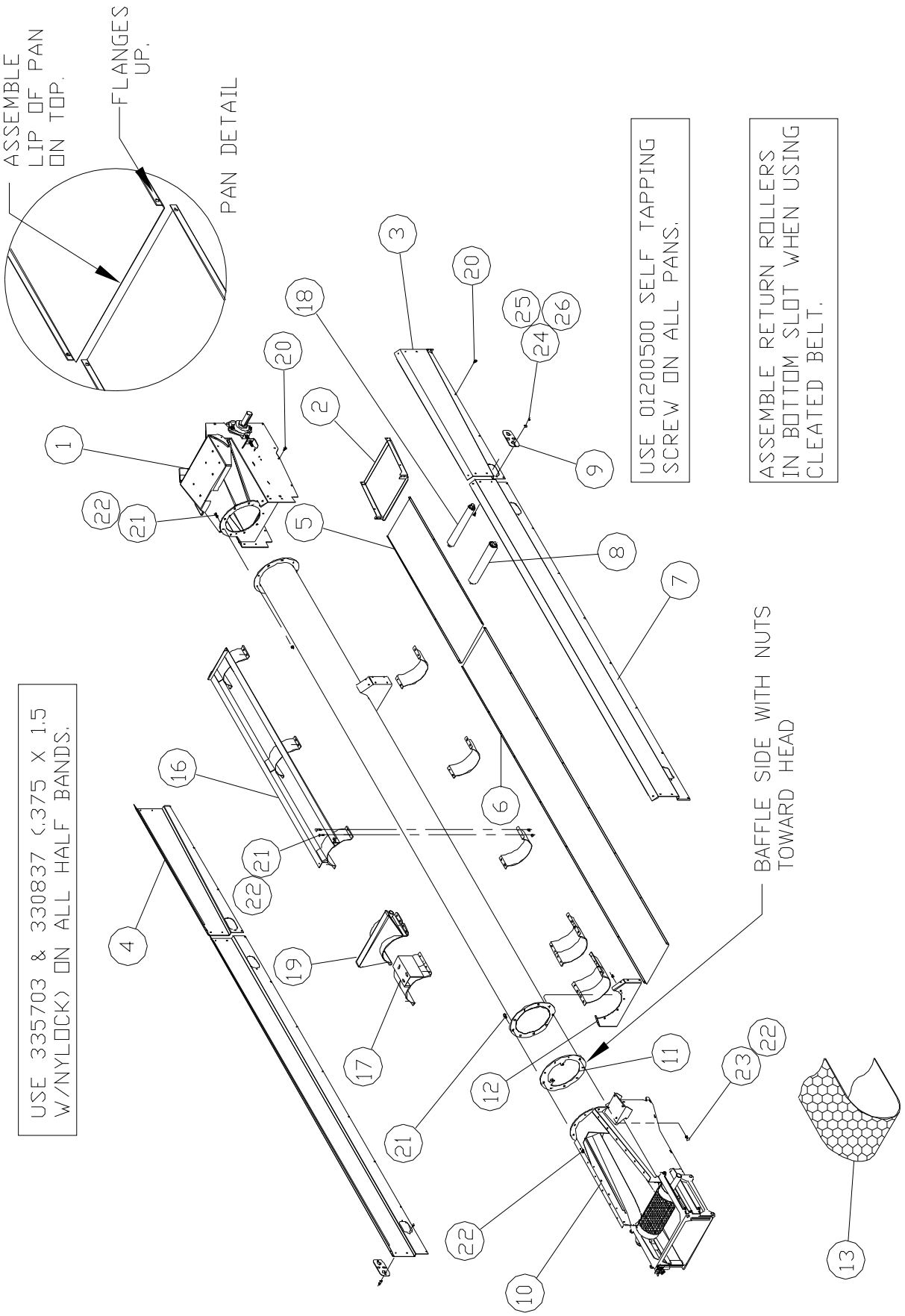

20' BeltVeyor - Hydraulic
Head, Tail and Pan

Dimensions from end of tube to half bands.

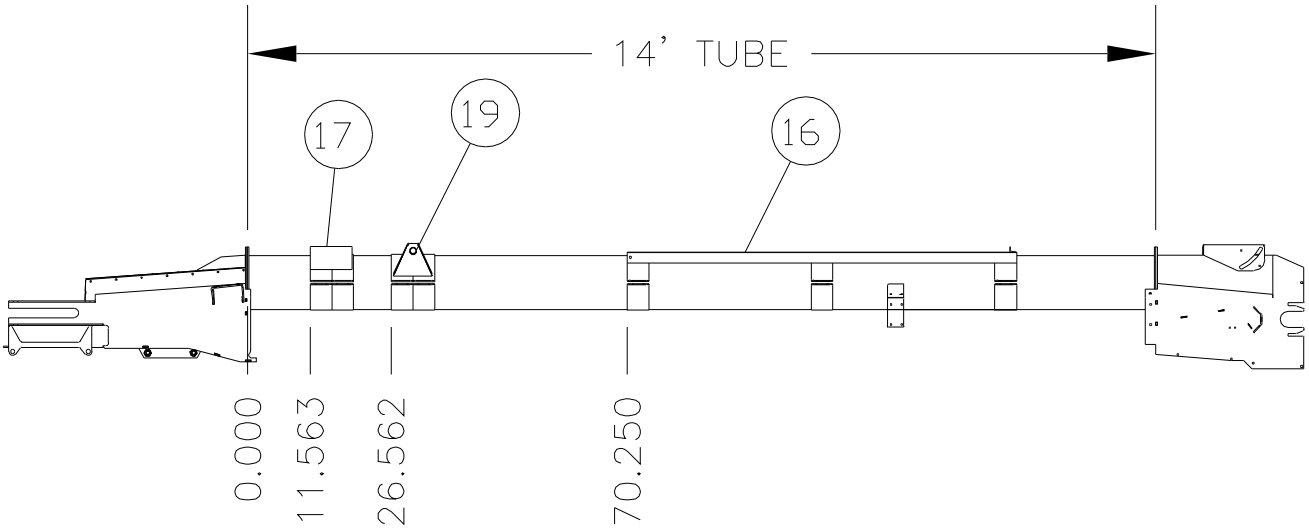

#63115000

Item	Qty	Part No.	Description
1	1	63087100	Head Assembly -8" Roller
2	1	30720700	Head Pan
3	1	30719900	Pan Side 4' Right
4	1	30161400	Pan Side 4' Left
5	1	30162200	Pan 4'
6	1	30164800	Pan 10'
7	2	30163000	Pan Side 10'
8	1	60196300	Plastic Roller 2 3/8"
9	6	30328900	Roller Slot Cover
10	1	62951900	Tail Assembly
11	1	82762600	Baffle
12	1	30731400	Tail Mount
13	1	62995600	Honeycomb Belt 16" x 39'-8"
14	1	82763400	Tube 10" x 14'
15	7	10319210	Half Band 4 x 10
16	1	81005100	6' Track
17	1	83100800	Winch Mount
18	1	63104400	Plastic Roller 2"
19	1	82907700	Axle Mount
20	56	01200500	Screw 5/16 x 3/4 Washer Head Self-Tap
21	44	335703	HHCS 3/8 x 1½"
22	48	330837	Nylock 3/8
23	2	332890	Carriage Bolt 3/8" x 1 3/4"
24	12	337949	Carriage Bolt 1/4 x 3/4"
25	12	02016400	Flat Washer 1/4"
26	12	330522	Nylock 1/4"

20' BeltVeyor - Hydraulic
Conveyor Parts

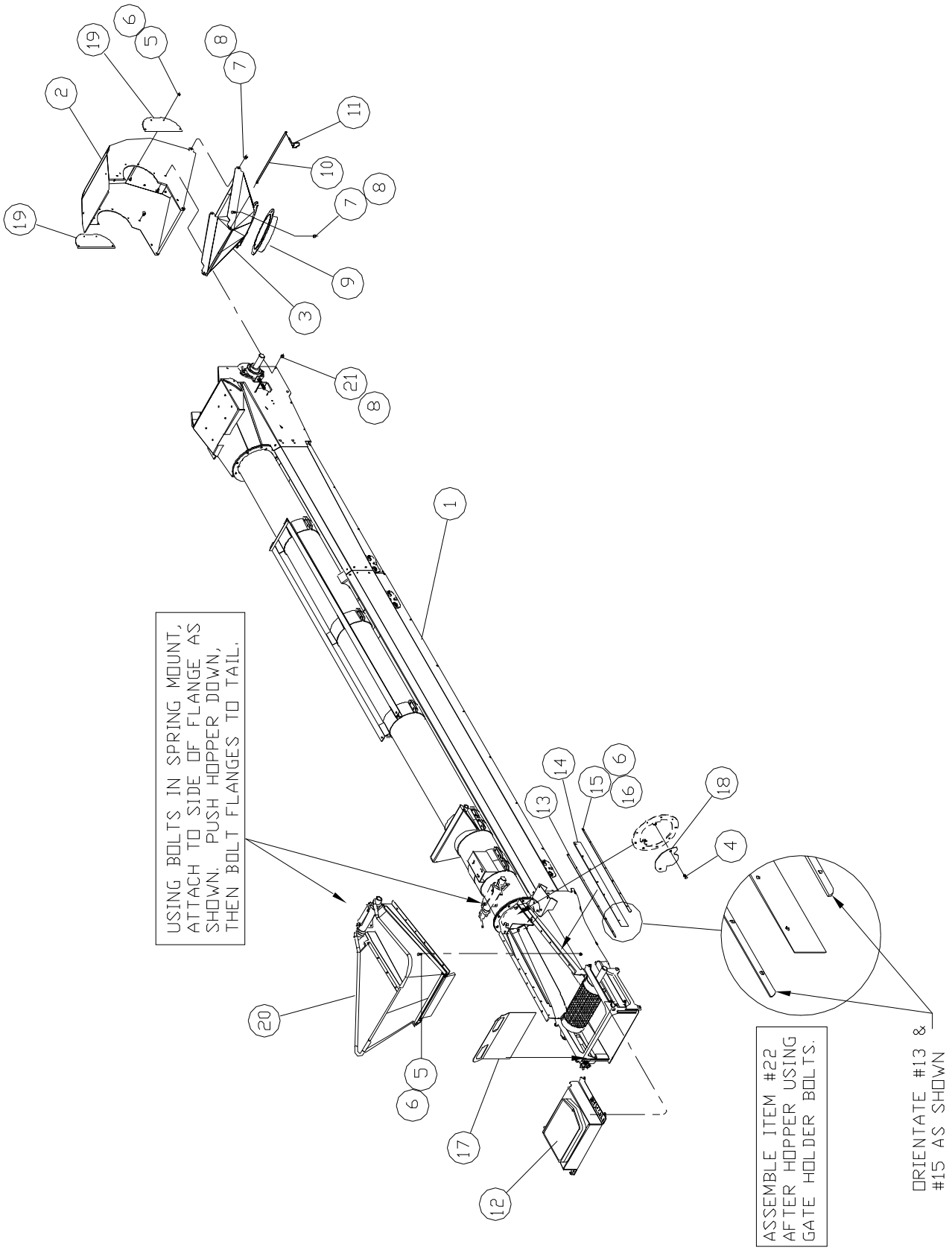

20' BeltVeyor - Hydraulic
Conveyor Parts

#63116800

Item	Qty	Part No.	Description
1	1	63115000	Head-Tail-Tube Assembly
2	1	63022800	Spout Top w/lining
3	1	82779000	Spout Bottom -10" Round
4	2	01017300	HHCS 3/8 x 1"
5	20	01057900	HHCS 1/4" x 3/4"
6	34	330522	Nylock 1/4"
7	11	01145200	HHCS 3/8 x 3/4"
8	17	330837	Nylock 3/8"
9	1	82791500	10" Spout Tube
10	1	30302400	Spout Pin
11	2	330928	Klik Pin 3/16"
12	1	62956800	Belt Cover & Brush
13	2	30158000	Inner Skirtboard
14	2	30159800	Outer Skirtboard
15	2	30157200	Nylon Skirtboard
16	14	333633	HHCS 1/4 x 1 1/4"
17	1	30204200	Tail Door
18	1	30337000	Baffle Plate
19	2	30721500	Spout Guard
20	1	62997200	Flex Hopper Assembly
21	6	330654	Carriage Bolt 3/8 x 1"

20' BeltVeyor - Hydraulic
Drive and Undercarriage

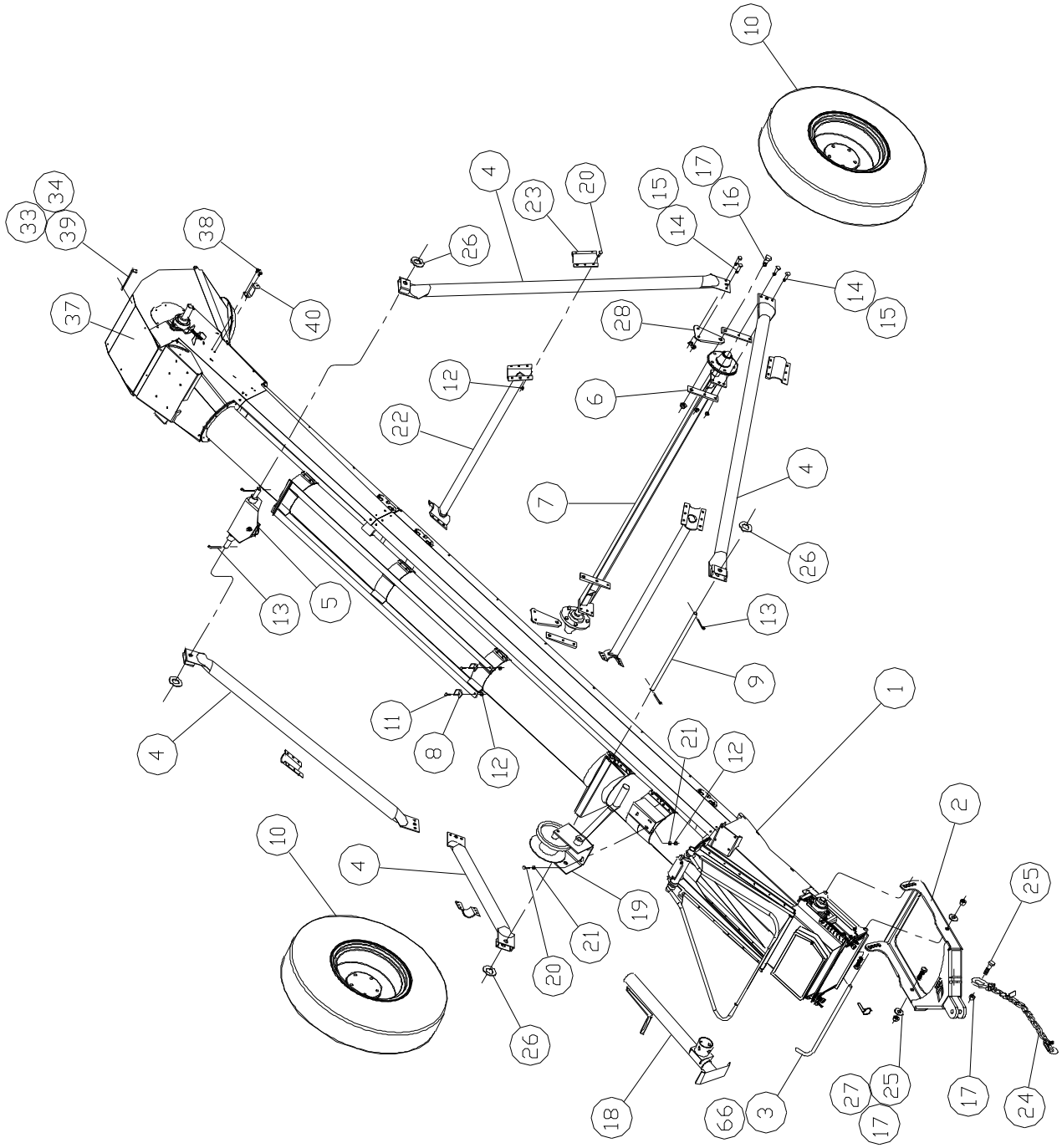

20' BeltVeyor - Hydraulic
Drive and Undercarriage

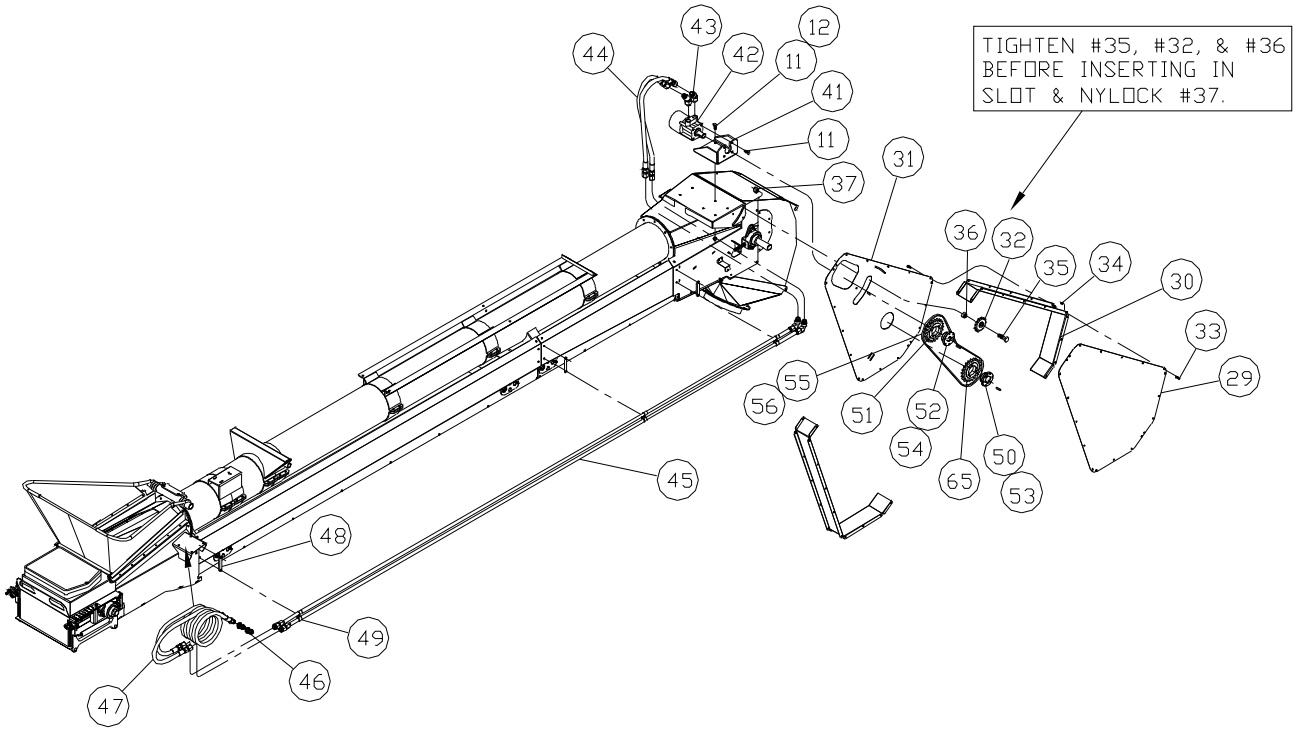

#90902800

Item	Qty	Part No.	Description
1	1	63116800	Conveyor Assembly
2	1	82745100	Pivot Hitch
3	1	30243000	Pivot Hitch Handle
4	4	83319400	Arm 7'
5	1	61641700	Track Slide Assembly
6	4	15999600	Axle Arm Bracket
7	1	71022800	Axle Assembly
8	2	12128500	Lower Stop
9	1	30764500	Axle Arm Pin
10	2	807313	Tire & Rim 9.5L x 15 6Ply 5 bolt rim
11	10	01017300	HHCS 3/8 x 4"
12	33	330837	Nylock 3/8"
13	4	02052900	Cotter Pin 1/4 x 1½"
14	8	335422	HHCS ½ x 2½"
15	8	331363	Nylock ½"
16	2	335174	HHCS 3/4 x 1 1/4"
17	5	330316	Nylock 3/4"
18	1	531558	Jack 2000# Side Crank Bottom Mount
19	1	68040500	Winch Assembly-44'Cable
20	27	01158500	HHCS 3/8 x 1 1/4"
21	6	330894	Flat Washer 3/8"
22	2	82908500	Cross Brace 50"
23	4	15721410	Cross Brace Band
24	1	433938	Safety Chain 11,000#
25	3	02307700	HHCS 3/4 x 3"
26	4	330407	Flat Washer 1"
27	2	330340	Flat Washer 3/4"
28	2	30772800	Lift Arm Extension
29	1	30197800	Guard Cover
30	2	30198600	Guard Side
31	1	30196000	Guard Back Plate
32	1	04046900	Idler Sprocket #60-13T
33	41	01057900	HHCS 1/4 x 3/4"
34	41	330522	Nylock 1/4"
35	1	01071000	HHCS 5/8 x 2"
36	1	330571	Hex Nut 5/8"
37	1	01572700	Nylock 5/8"
38	2	01200500	Screw 5/16 x 3/4" Washer Head Self Tap
39	1	30732200	Head Guard Bracket Top
40	1	30331300	Head Guard Bracket Side
41	1	30789200	Motor Mount
42	1	04148300	Hydraulic Motor
43	2	00542100	Adapter 45° 7/8 MOR x 7/8 JICM
44	2	02125300	Hose ½" x 29½" 7/8 FJICSW
45	2	63127500	Hydraulic Line 5/8 x 176"
46	2	465385	Male Coupler 3/4 F O-ring
47	2	472936	Hose ½" x 114" 7/8 FJICSW x 3/4 MOR
48	3	30788400	Clamp Bracket
49	6	00613000	Hose Clamp 5/8"
50	1	04418000	Bushing 1½" SK
51	1	00967000	Sprocket #60 21T SDS
52	1	04264800	Bushing 1" SDS
53	1	20072500	Key 3/8 x 2"
54	1	10490100	Key 1/4 x 1 1/4"
55	1	13400700	Chain #60 x 79 Pitches
56	1	02044600	Chain #60 Connector
65	1	02714400	Sprocket #60 32T SK
66	1	330928	Klik Pin 3/16"

30' BeltVeyor

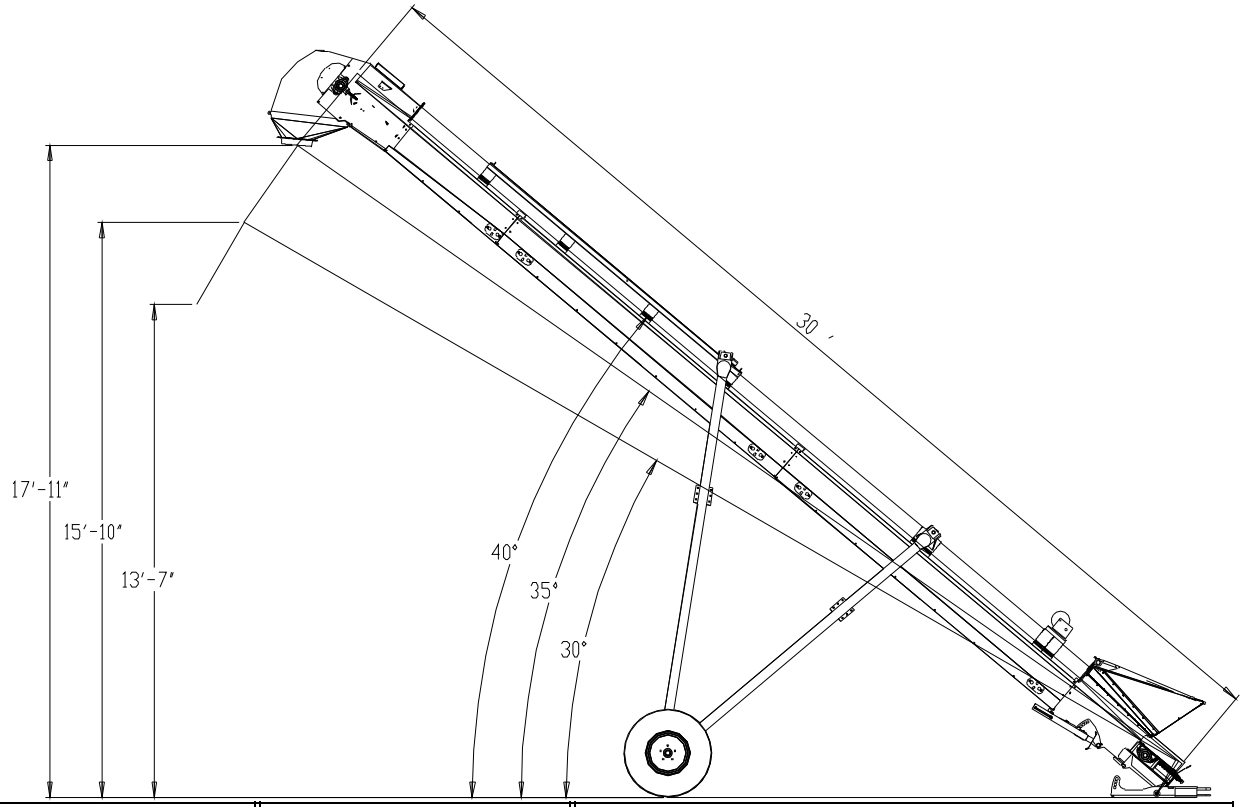

30'-16" Honeycomb Belt				30'-16" Crescent Belt			
ft/min	angle	bu/hr	hp	ft/min	angle	bu/hr	hp
389	30	3000	6.6	389	27	2700	6.0
389	35	2750	6.9				
389	40	2500	7.1				
474	30	3613	7.3	474	27	3050	7.3
474	35	3312	7.6				
474	40	3011	7.9				
576	30	4278	8.1	576	27	3410	7.6
576	35	3922	8.4				
576	40	3565	8.8				
728	30	5270	9.3	728	27	3800	8.6
728	35	4830	9.7				
728	40	4391	10.0				
833	30	6000	10.1	833	27	3950	9.0
833	35	5500	10.5				
833	40	5000	10.9				

All bu/hr was done with 60 lb/bu wheat @ 12%-15% moisture

Undercarriage -	sliding
Available drives -	Electric
	Hydraulic
Electric -	10 hp minimum
	Use 3 phase @1800 RPM
Hydraulic -	minimum 14 gpm @2000 psi from source
	minimum 10 gpm @2500 psi from source
	do not exceed 2750 psi and 20 gpm
Drive Type -	Head drive jack-shaft style
Belt -	16" Honeycomb cleat
	16" crescent
Maximum angle -	
Crescent	27 degrees
Honeycomb	40 plus degrees

Operations above recommended angle WILL result in damage to unit.

30' BeltVeyor - Electric
Head, Tail and Pan

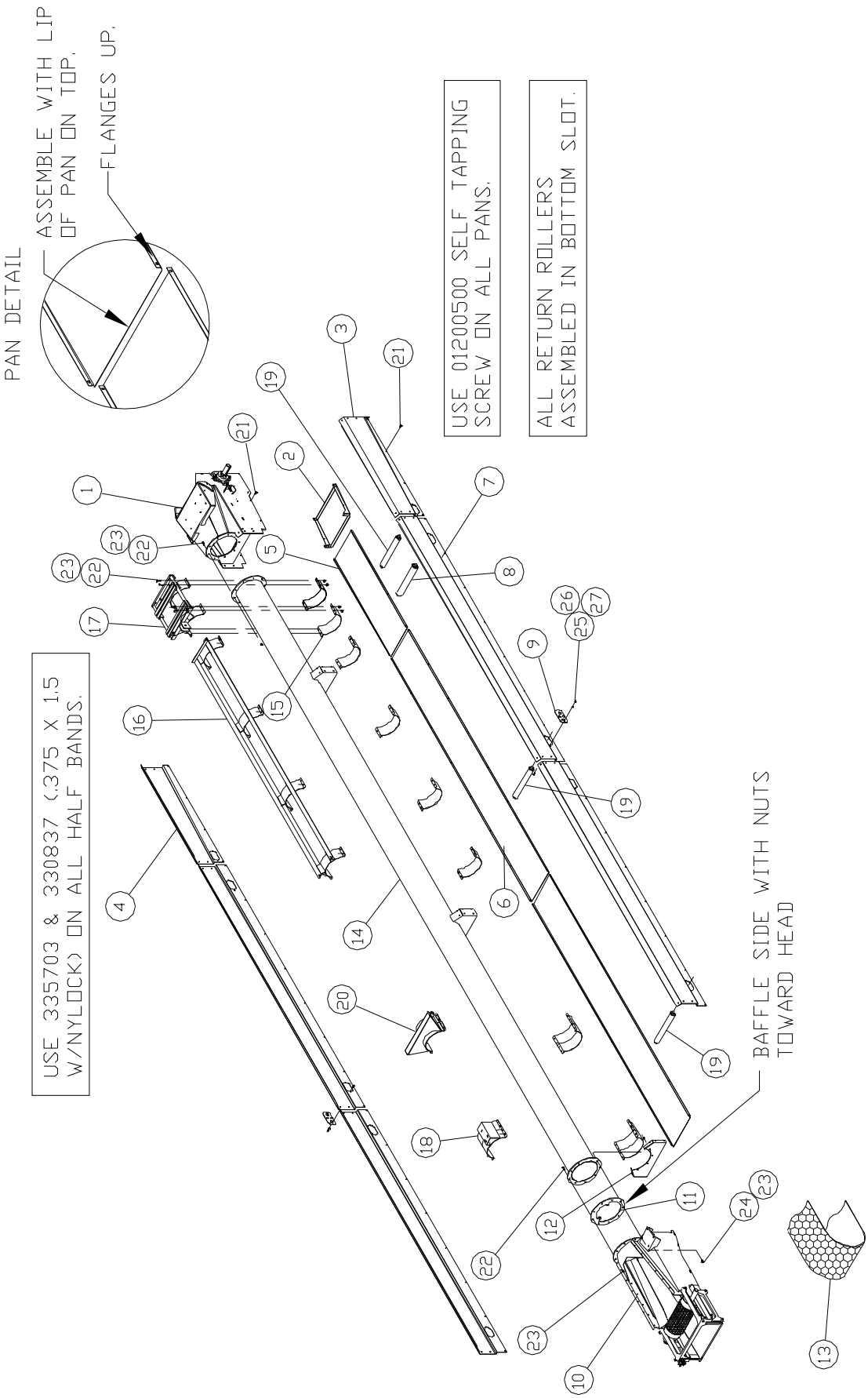

30' BeltVeyor - Electric
Head, Tail and Pan

Dimensions from end of tube to half bands.

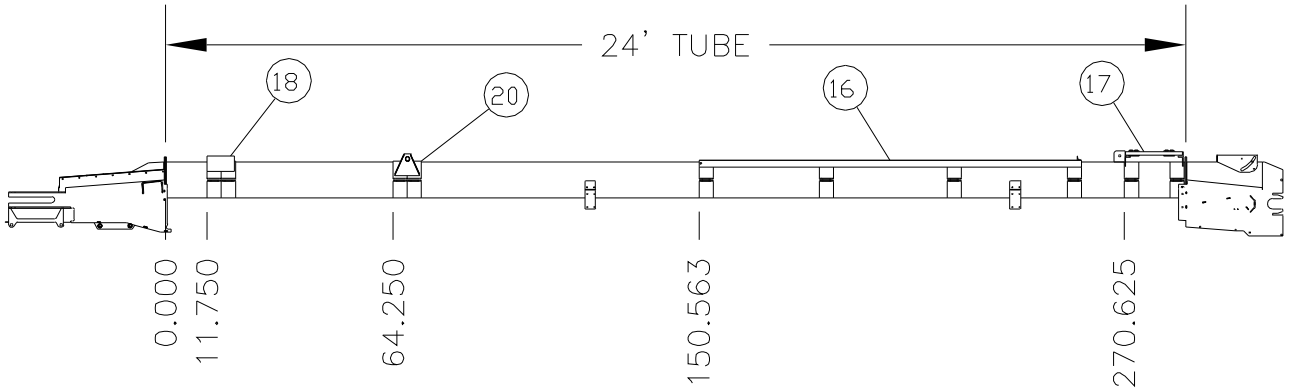

#62982400

Item	Qty	Part No.	Description
1	1	63087100	Head Assembly -8" Roller
2	1	30720700	Head Pan
3	1	30719900	Pan Side 4' Right
4	1	30161400	Pan Side 4' Left
5	1	30162200	Pan 4'
6	2	30164800	Pan 10'
7	4	30163000	Pan Side 10'
8	1	60196300	Plastic Roller 2 3/8"
9	10	30328900	Roller Slot Cover
10	1	62951900	Tail Assembly
11	1	82762600	Baffle
12	1	30731400	Tail Mount
13	1	62993100	Honeycomb Belt 16" x 59'-5"
14	1	82716200	Tube 10" x 24'
15	10	10319210	Half Band 4 x 10
16	1	81006900	9' Track
17	1	81879900	Electric Motor Mount
18	1	83100800	Winch Mount
19	3	63104400	Plastic Roller 2"
20	1	82907700	Axle Mount
21	92	01200500	Screw 5/16 x 3/4 Washer Head Self-Tap
22	56	335703	HHCS 3/8 x 1½"
23	58	330837	Nylock 3/8
24	2	332890	Carriage Bolt 3/8" x 1 3/4"
25	20	337949	Carriage Bolt 1/4 x 3/4"
26	20	02016400	Flat Washer 1/4"
27	20	330522	Nylock 1/4"

30' BeltVeyor - Electric
Conveyor Parts

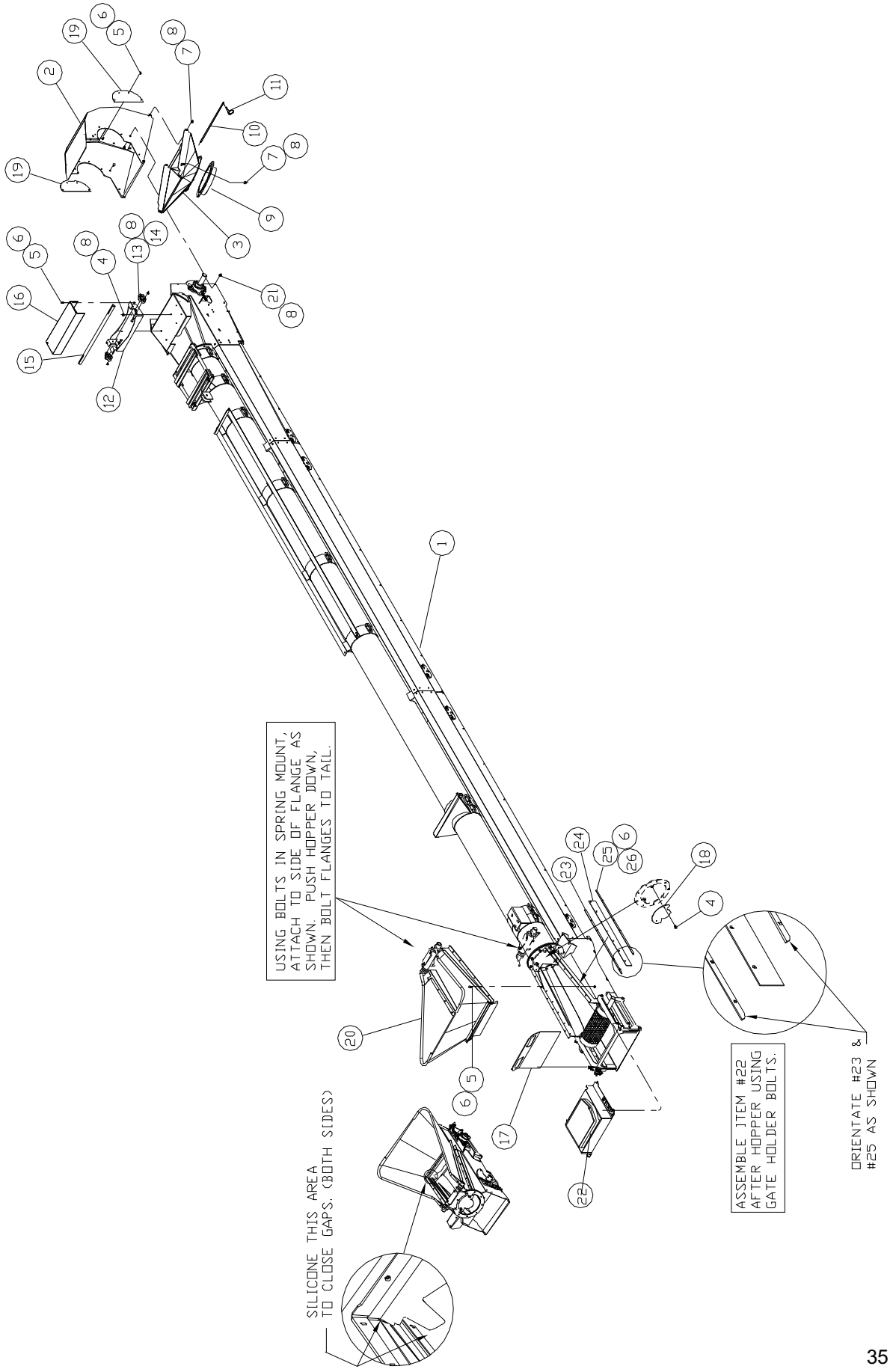

30' BeltVeyor - Electric
Conveyor Parts

#62983200

Item	Qty	Part No.	Description
1	1	62982400	Head-Tail-Tube Assembly
2	1	63022800	Spout Top w/lining
3	1	82779000	Spout Bottom -10" Round
4	6	01017300	HHCS 3/8 x 1"
5	28	01057900	HHCS 1/4" x 3/4"
6	42	330522	Nylock 1/4"
7	11	01145200	HHCS 3/8 x 3/4"
8	25	330837	Nylock 3/8"
9	1	82791500	10" Spout Tube
10	1	30302400	Spout Pin
11	2	330928	Klik Pin 3/16"
12	1	30230700	Shaft Mount
13	2	03001500	Bearing 1"
14	4	335703	HHCS 3/8 x 1½"
15	1	30291900	Drive Shaft
16	1	30231500	Shaft Cover
17	1	30204200	Tail Door
18	1	30337000	Baffle Plate
19	2	30721500	Spout Guard
20	1	62997200	Flex Hopper Assembly
21	6	330654	Carriage Bolt 3/8 x 1"
22	1	62956800	Belt Cover & Brush
23	2	30158000	Inner Skirtboard
24	2	30157200	Nylon Skirtboard
25	2	30159800	Outer Skirtboard
26	14	333633	HHCS 1/4 x 1 1/4"

30' BeltVeyor - Electric
Drive and Undercarriage

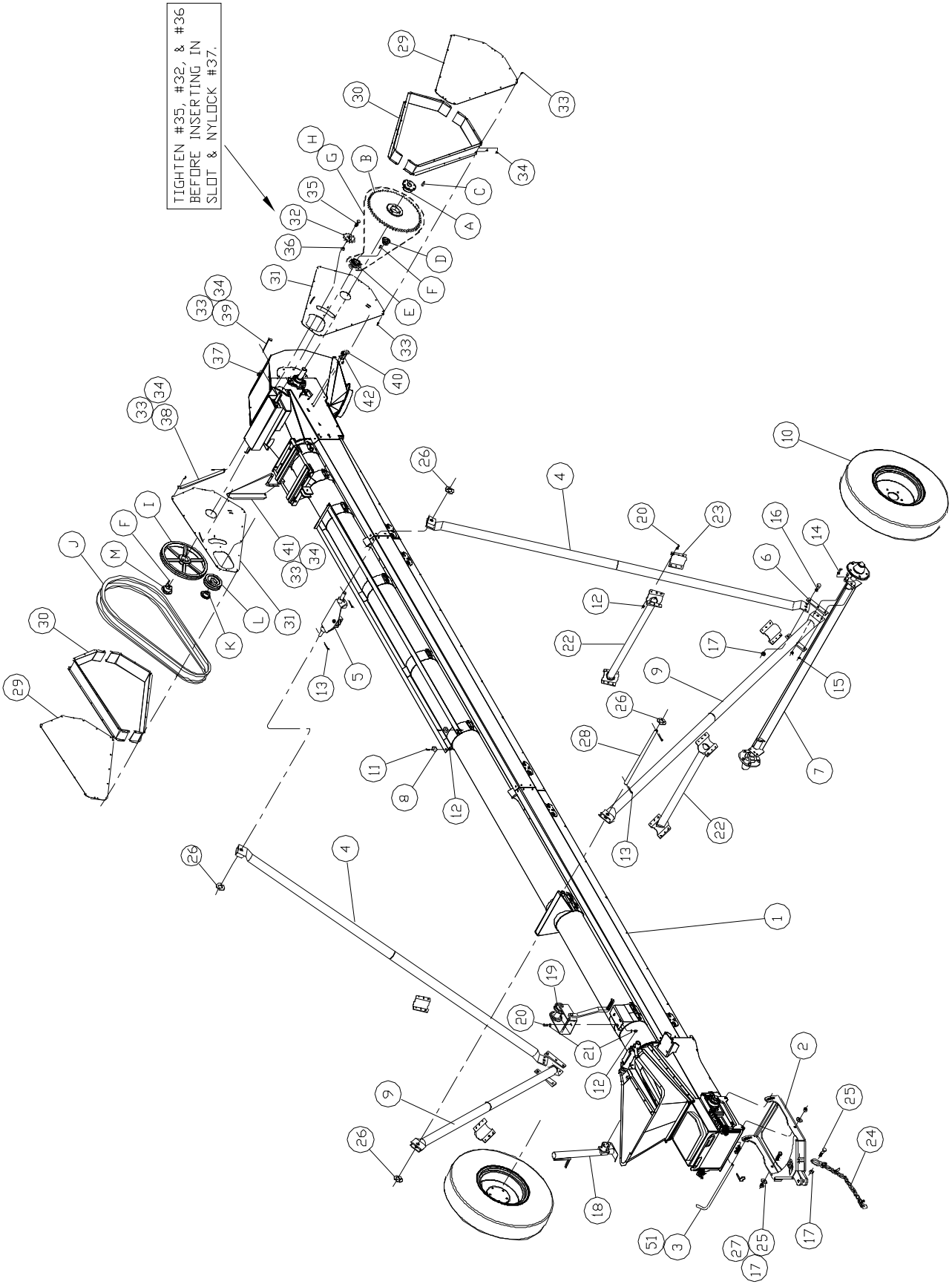

30' BeltVeyor - Electric
Drive and Undercarriage

#90868100

Item	Qty	Part No.	Description
1	1	62983200	Conveyor Assembly
2	1	82745100	Pivot Hitch
3	1	30243000	Pivot Hitch Handle
4	2	81312100	Arm 11'-2"
5	1	61641700	Track Slide Assembly
6	4	15999600	Axle Arm Bracket
7	1	71022800	Axle Assembly
8	2	12128500	Lower Stop
9	2	83321000	Arm 9'-10"
10	2	807313	Tire & Rim 9.5L x 15 6Ply 5 bolt rim
11	2	01017300	HHCS 3/8 x 4"
12	29	330837	Nylock 3/8"
13	4	02052900	Cotter Pin 1/4 x 1½"
14	4	335422	HHCS ½ x 2½"
15	4	331363	Nylock ½"
16	2	335174	HHCS 3/4 x 1 1/4"
17	3	330316	Nylock 3/4"
18	1	531558	Jack 2000# Side Crank Bottom Mount
19	1	68040500	Winch Assembly-44'Cable
20	27	01158500	HHCS 3/8 x 1 1/4"
21	6	330894	Flat Washer 3/8"
22	2	84010800	Cross Brace 36"
23	4	15721410	Cross Brace Band
24	1	433938	Safety Chain 11,000#
25	3	02307700	HHCS 3/4 x 3"
26	4	330407	Flat Washer 1"
27	2	330340	Flat Washer 3/4"
28	1	30764500	Axle Arm Pin
29	2	30197800	Guard Cover
30	4	30198600	Guard Side
31	2	30196000	Guard Back Plate
32	1	04046900	Idler Sprocket #60-13T
33	88	01057900	HHCS 1/4 x 3/4"
34	88	330522	Nylock 1/4"
35	1	01071000	HHCS 5/8 x 2"
36	1	330571	Hex Nut 5/8"
37	1	01572700	Nylock 5/8"
38	1	30576300	Head Guard Bracket
39	1	30732200	Head Guard Bracket Top
40	1	30331300	Head Guard Bracket Side
41	1	30382600	Head Guard Bracket Front
42	2	01200500	Screw 5/16 x 3/4" Washer Head Self Tap
51	1	330928	Klik Pin 3/16"

30' Electric Drive Options

Description	#63007900 389 FPM	#63005300 474 FPM	#63006100 576 FPM	#63103700 728 FPM	#63008700 833 FPM
A- Bushing	00730200	00730200	00730200	00730200	00730200
B- Sprocket	00416800	00416800	00416800	00416800	00416800
C- Key	20072500	20072500	20072500	20072500	20072500
D- Bushing	04264800	04264800	04264800	04264800	04264800
E- Sprocket	00967000	00967000	00967000	00967000	00967000
F- Key	10490100	10490100	10490100	10490100	10490100
G- Chain	13657200	13657200	13657200	13657200	13657200
H- Connector	02044600	02044600	02044600	02044600	02044600
I- Sheave	04285300	04285300	04285300	04285300	04425500
J- V-Belt	03527900	03527900	04147500	04146700	00042200
K- Bushing	04348900	04348900	04348900	01897800	04348900
L- Sheave	04456000	04371100	04303400	04425500	04456000
M- Bushing	04332300	04332300	04332300	04332300	04332300

30' BeltVeyor - Hydraulic
Head, Tail and Pan

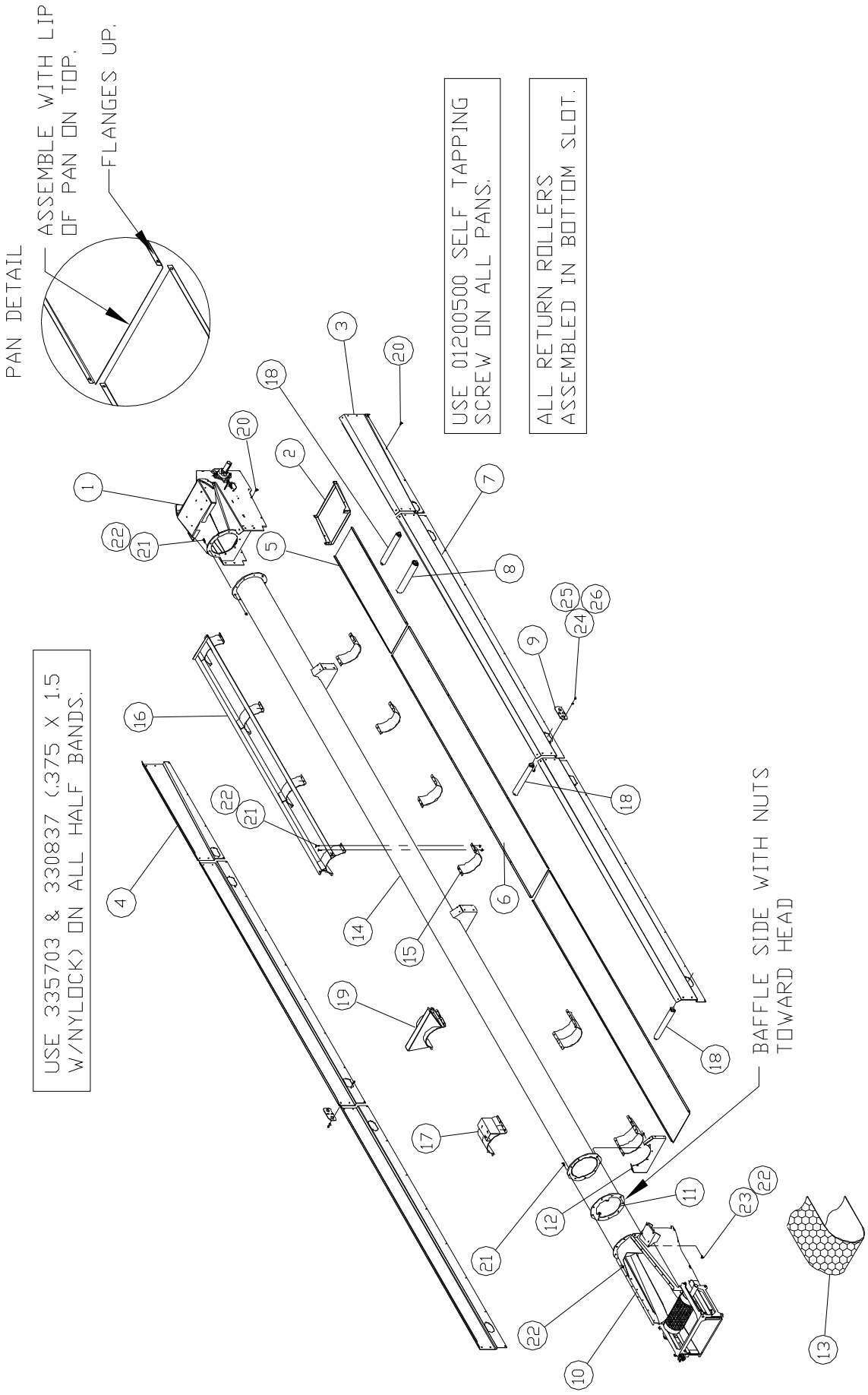

30' BeltVeyor - Hydraulic
Head, Tail and Pan

Dimensions from end of tube to half bands.

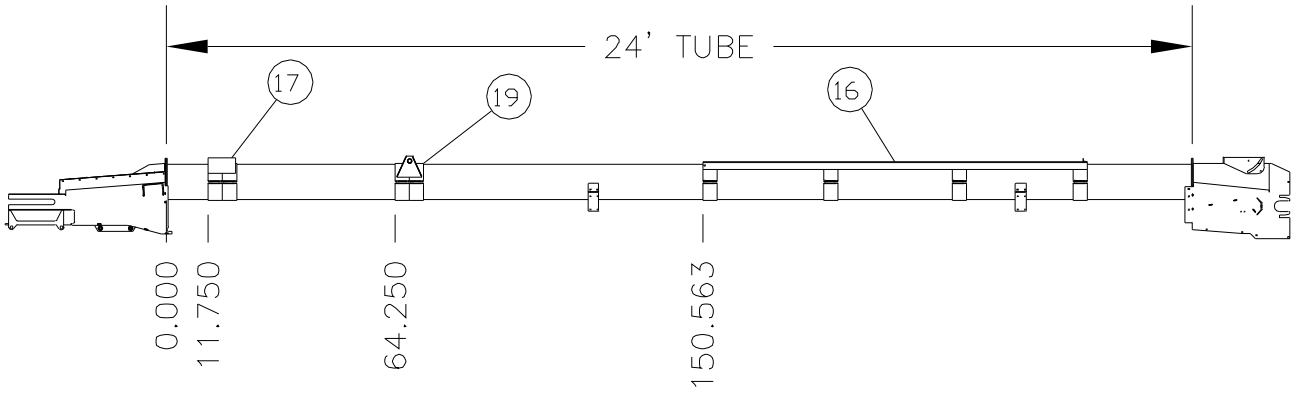

#63117600

Item	Qty	Part No.	Description
1	1	63087100	Head Assembly -8" Roller
2	1	30720700	Head Pan
3	1	30719900	Pan Side 4' Right
4	1	30161400	Pan Side 4' Left
5	1	30162200	Pan 4'
6	2	30164800	Pan 10'
7	4	30163000	Pan Side 10'
8	1	60196300	Plastic Roller 2 3/8"
9	10	30328900	Roller Slot Cover
10	1	62951900	Tail Assembly
11	1	82762600	Baffle
12	1	30731400	Tail Mount
13	1	62993100	Honeycomb Belt 16" x 59'-5"
14	1	82716200	Tube 10" x 24'
15	8	10319210	Half Band 4 x 10
16	1	81006900	9' Track
17	1	83100800	Winch Mount
18	3	63104400	Plastic Roller 2"
19	1	82907700	Axle Mount
20	92	01200500	Screw 5/16 x 3/4 Washer Head Self-Tap
21	48	335703	HHCS 3/8 x 1½"
22	50	330837	Nylock 3/8
23	2	332890	Carriage Bolt 3/8" x 1 3/4"
24	20	337949	Carriage Bolt 1/4 x 3/4"
25	20	02016400	Flat Washer 1/4"
26	20	330522	Nylock 1/4"

30' BeltVeyor - Hydraulic
Conveyor Parts

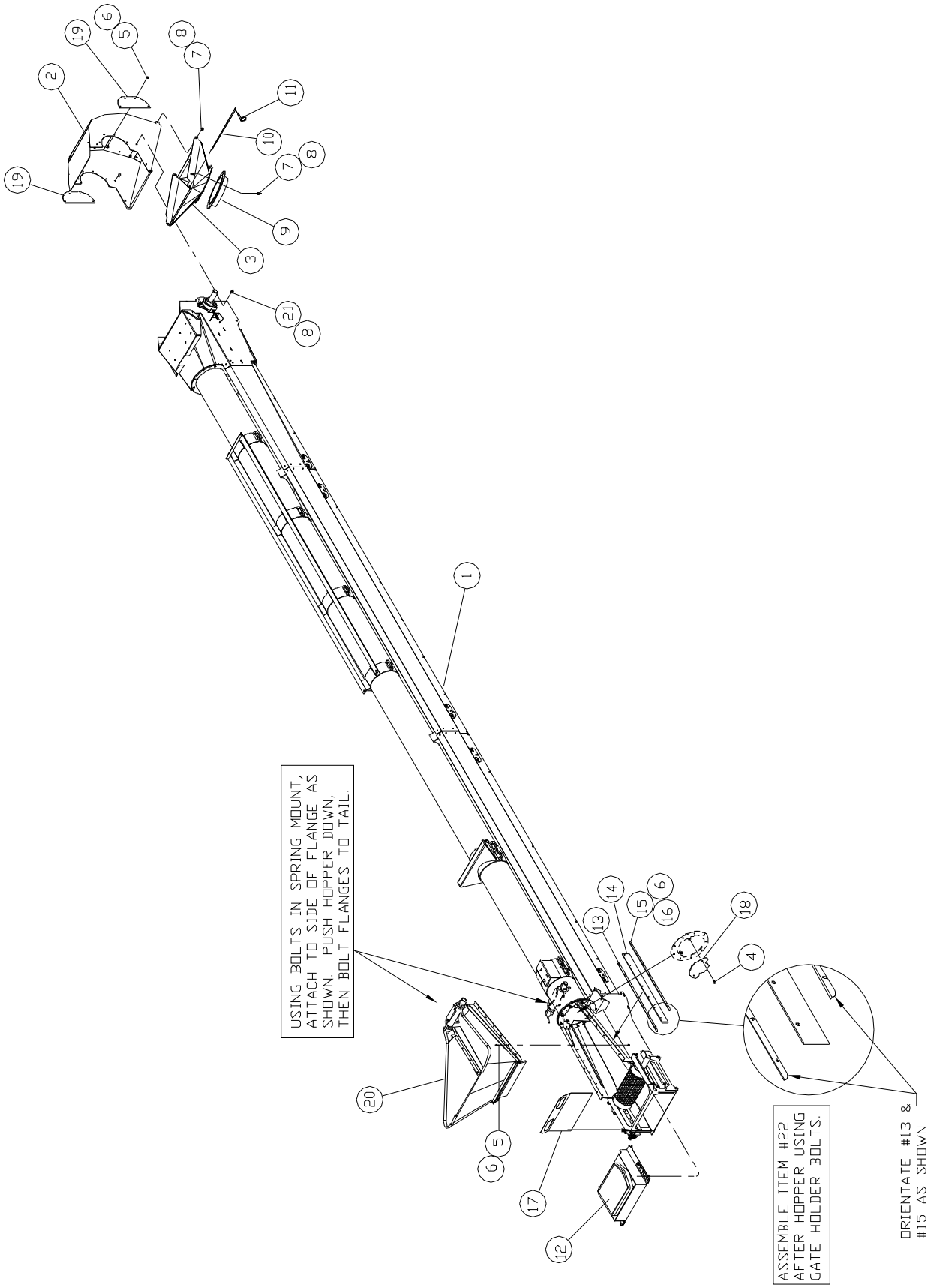

30' BeltVeyor - Hydraulic
Conveyor Parts

#63118400

Item	Qty	Part No.	Description
1	1	63117600	Head-Tail-Tube Assembly
2	1	63022800	Spout Top w/lining
3	1	82779000	Spout Bottom -10" Round
4	2	01017300	HHCS 3/8 x 1"
5	24	01057900	HHCS 1/4" x 3/4"
6	38	330522	Nylock 1/4"
7	11	01145200	HHCS 3/8 x 3/4"
8	17	330837	Nylock 3/8"
9	1	82791500	10" Spout Tube
10	1	30302400	Spout Pin
11	2	330928	Klik Pin 3/16"
12	1	62956800	Belt Cover & Brush
13	2	30158000	Inner Skirtboard
14	2	30159800	Outer Skirtboard
15	2	30157200	Nylon Skirtboard
16	14	333633	HHCS 1/4 x 1 1/4"
17	1	30204200	Tail Door
18	1	30337000	Baffle Plate
19	2	30721500	Spout Guard
20	1	62997200	Flex Hopper Assembly
21	6	330654	Carriage Bolt 3/8 x 1"

30' BeltVeyor - Hydraulic
Drive and Undercarriage

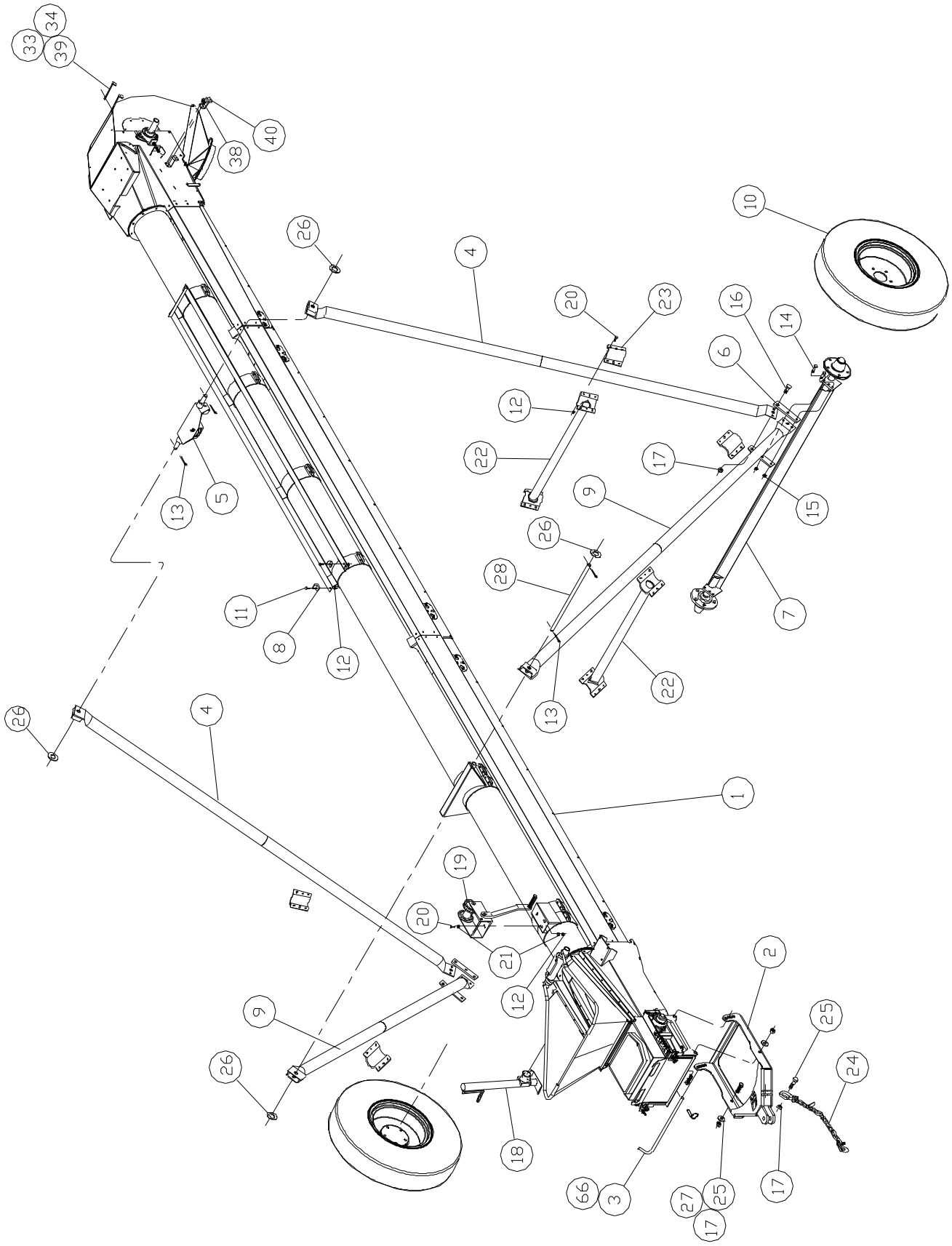

30' BeltVeyor - Hydraulic
Drive and Undercarriage

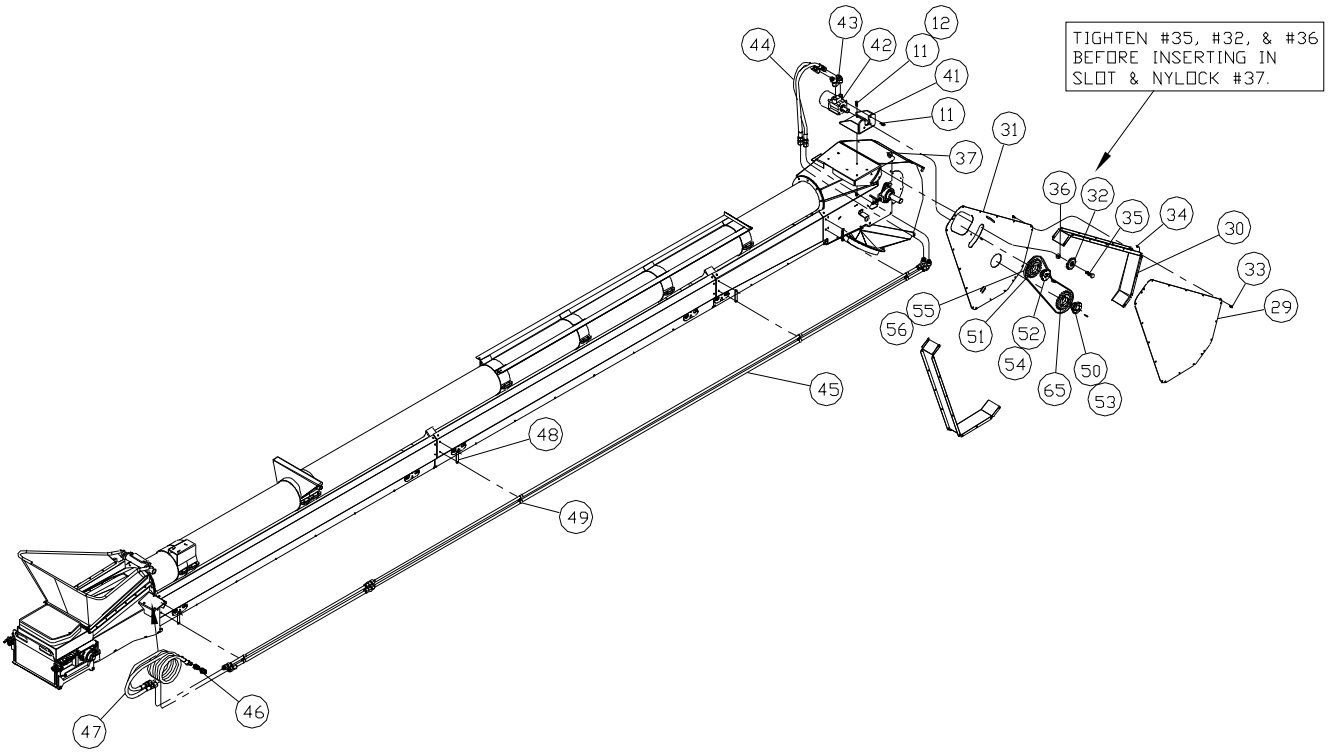

#90903600

Item	Qty	Part No.	Description
1	1	63118400	Conveyor Assembly
2	1	82745100	Pivot Hitch
3	1	30243000	Pivot Hitch Handle
4	2	81312100	Arm 11'-2"
5	1	61641700	Track Slide Assembly
6	4	15999600	Axle Arm Bracket
7	1	71022800	Axle Assembly
8	2	12128500	Lower Stop
9	2	83321000	Arm 9'-10"
10	2	807313	Tire & Rim 9.5L x 15 6Ply 5 bolt rim
11	10	01017300	HHCS 3/8 x 4"
12	33	330837	Nylock 3/8"
13	4	02052900	Cotter Pin 1/4 x 1½"
14	4	335422	HHCS ½ x 2½"
15	4	331363	Nylock ½"
16	2	335174	HHCS 3/4 x 1 1/4"
17	3	330316	Nylock 3/4"
18	1	531558	Jack 2000# Side Crank Bottom Mount
19	1	68040500	Winch Assembly-44'Cable
20	27	01158500	HHCS 3/8 x 1 1/4"
21	6	330894	Flat Washer 3/8"
22	2	84010800	Cross Brace 36"
23	4	15721410	Cross Brace Band
24	1	433938	Safety Chain 11,000#
25	3	02307700	HHCS 3/4 x 3"
26	4	330407	Flat Washer 1"
27	2	330340	Flat Washer 3/4"
28	1	30764500	Lift Arm Extension
29	1	30197800	Guard Cover
30	2	30198600	Guard Side
31	1	30196000	Guard Back Plate
32	1	04046900	Idler Sprocket #60-13T
33	41	01057900	HHCS 1/4 x 3/4"
34	41	330522	Nylock 1/4"
35	1	01071000	HHCS 5/8 x 2"
36	1	330571	Hex Nut 5/8"
37	1	01572700	Nylock 5/8"
38	2	01200500	Screw 5/16 x 3/4" Washer Head Self Tap
39	1	30732200	Head Guard Bracket Top
40	1	30331300	Head Guard Bracket Side
41	1	30789200	Motor Mount
42	1	04148300	Hydraulic Motor
43	2	00542100	Adapter 45° 7/8 MOR x 7/8 JICM
44	2	02125300	Hose ½" x 29½" 7/8 FJICSW
45	2	63125900	Hydraulic Line 5/8 x 294"
46	2	465385	Male Coupler 3/4 F O-ring
47	2	472936	Hose ½" x 114" 7/8 FJICSW x 3/4 MOR
48	4	30788400	Clamp Bracket
49	8	00613000	Hose Clamp 5/8"
50	1	04418000	Bushing 1½" SK
51	1	00967000	Sprocket #60 21T SDS
52	1	04264800	Bushing 1" SDS
53	1	20072500	Key 3/8 x 2"
54	1	10490100	Key 1/4 x 1 1/4"
55	1	13400700	Chain #60 x 79 Pitches
56	1	02044600	Chain #60 Connector
65	1	02714400	Sprocket #60 32T SK
66	1	330928	Klik Pin 3/16"

40' BeltVeyor

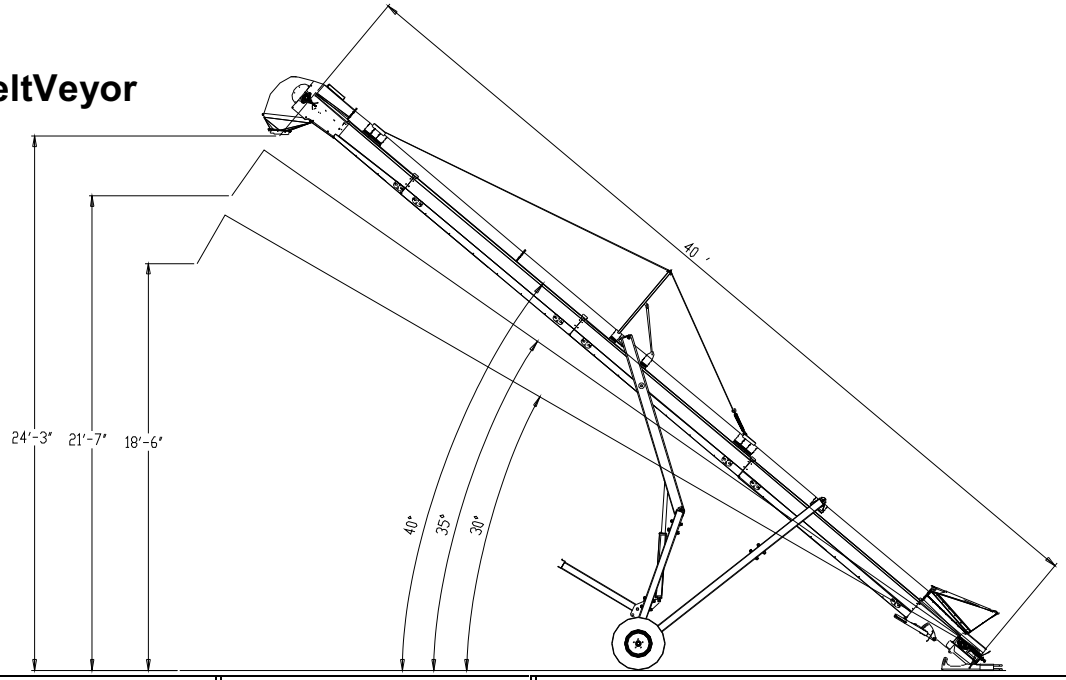

40'-16" Honeycomb Belt				40'-16" Crescent Belt			
ft/min	angle	bu/hr	hp	ft/min	angle	bu/hr	hp
380	30	3000	8.8	380	27	2700	8.0
380	35	2750	9.1				
380	40	2500	9.5				
457	30	3499	9.6	457	27	3000	9.7
457	35	3207	10.0				
457	40	2916	10.4				
578	30	4254	10.8	578	27	3410	10.1
578	35	3899	11.3				
578	40	3545	11.7				
706	30	5052	12.1	706	27	3750	11.4
706	35	4631	12.6				
706	40	4210	13.2				
858	30	6000	13.4	858	27	4000	12.0
858	35	5500	14.0				
858	40	5000	14.6				

All bu/hr was done with 60 lb/bu wheat @ 12%-15% moisture

Undercarriage -	hydraulic	
Available drives -	Electric	
	PTO	
	Hydraulic	
Electric -	15 hp minimum	
	Use 3 phase @1800 RPM	
PTO -	Use 540 PTO	
Hydraulic -	minimum 18 gpm @2000 psi from source	
	minimum 14 gpm @2500 psi from source	
	do not exceed 2750 psi and 20 gpm	
Drive Type -	Head drive jack-shaft style	
Belt -	16" Honeycomb cleat	
	16" crescent	
Maximum angle -	Crescent	27 degrees
	Honeycomb	40 plus degrees

Operations above recommended angle WILL result in damage to unit.

40' BeltVeyor - Electric
Head, Tail and Pan

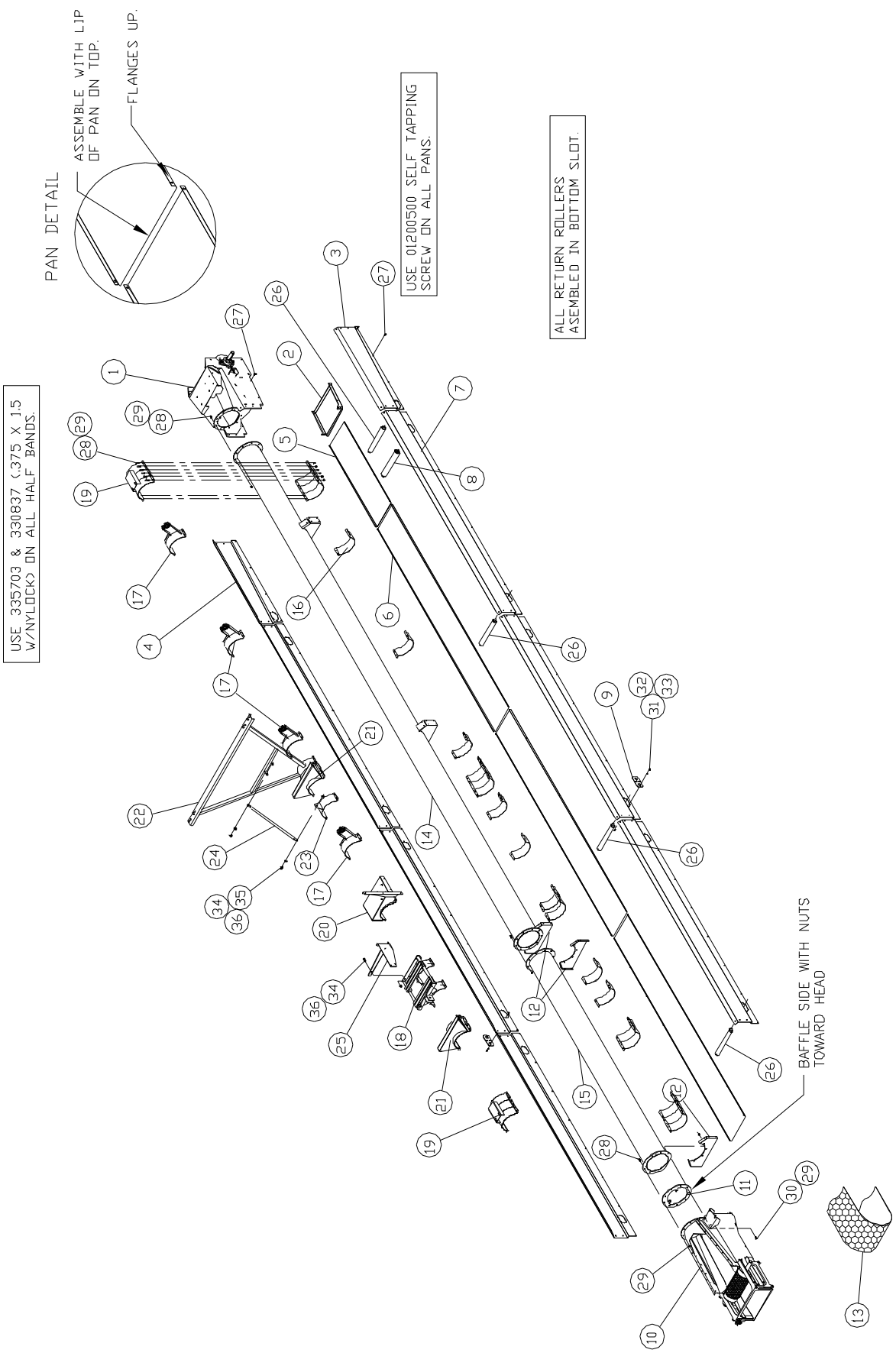

40' BeltVeyor - Electric
Head, Tail and Pan

Dimensions from end of tube to half bands.

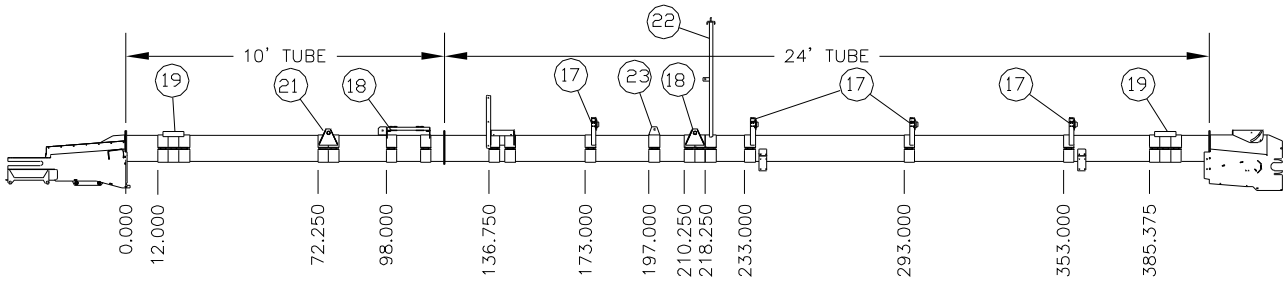

#62988100

Item	Qty	Part No.	Description
1	1	63086300	Head Assembly -10" Roller
2	1	30720700	Head Pan
3	1	30719900	Pan Side 4' Right
4	1	30161400	Pan Side 4' Left
5	1	30162200	Pan 4'
6	3	30164800	Pan 10'
7	6	30163000	Pan Side 10'
8	1	60196300	Plastic Roller 2 3/8"
9	14	30328900	Roller Slot Cover
10	1	62951900	Tail Assembly
11	1	82762600	Baffle
12	1	30731400	Tail Mount
13	1	62994900	Honeycomb Belt 16" x 79'-2"
14	1	82716200	Tube 10" x 24'
15	1	82081100	Tube 10" x 10'
16	20	10319210	Half Band 4 x 10
17	4	63085500	Bearing Mount Assembly
18	1	81879900	Electric Motor Mount
19	2	82737800	Cable Mount
20	1	82729500	Gear Box Mount
21	2	82907700	Axle Mount
22	1	82739400	Truss Long
23	1	82742800	Truss Brace
24	1	17122300	Truss Arm
25	1	30222400	Tail Guard Bracket
26	4	63104400	Plastic Roller 2"
27	112	01200500	Screw 5/16 x 3/4 Washer Head Self-Tap
28	105	335703	HHCS 3/8 x 1½"
29	107	330837	Nylock 3/8
30	2	332890	Carriage Bolt 3/8" x 1 3/4"
31	28	337949	Carriage Bolt 1/4 x 3/4"
32	28	02016400	Flat Washer 1/4"
33	28	330522	Nylock 1/4"
34	4	01180900	HHCS ½" x 1 1/4"
35	2	330159	Flat Washer ½"
36	4	331363	Nylock ½"

40' BeltVeyor - Electric
Conveyor Parts

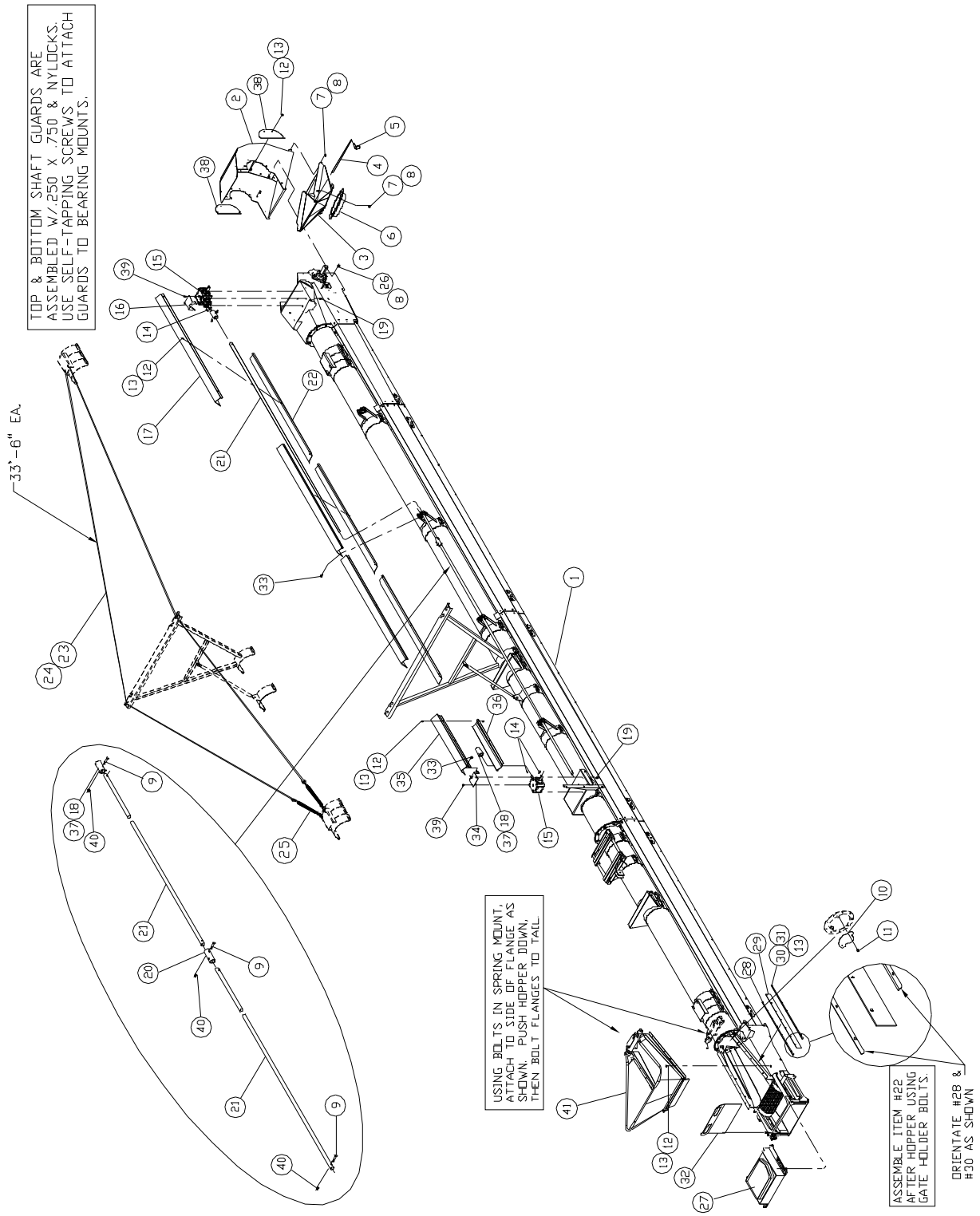

40' BeltVeyor - Electric
Conveyor Parts

#62989900

Item	Qty	Part No.	Description
1	1	62988100	Head-Tail-Tube Assembly
2	1	63022800	Spout Top w/lining
3	1	82779000	Spout Bottom -10" Round
4	1	30302400	Spout Pin
5	2	330928	Klik Pin 3/16"
6	1	82791500	10" Spout Tube
7	11	01145200	HHCS 3/8 x 3/4"
8	17	330837	Nylock 3/8"
9	4	331926	HHCS ½" x 2"
10	1	30337000	Baffle Plate
11	2	01017300	HHCS 3/8" x 1"
12	56	01057900	HHCS 1/4" x 3/4"
13	70	330522	Nylock 1/4"
14	3	10490100	Key 1/4 x 1 1/4"
15	2	04007100	Gear Box
16	1	30213300	Head Guard Mount
17	4	30200000	Shaft Guard Top Long
18	2	30202600	Sleeve w/keyway
19	8	01010800	HHCS 5/16" x 1"
20	1	30203400	Shaft Sleeve
21	2	30773600	Drive Shaft
22	4	30199400	Shaft Guard Bottom Long
23	47'	01506500	Cable 3/8 x 19
24	8	01502400	Cable Clamp 3/8
25	2	04151700	Turnbuckle 5/8" x 9
26	6	330654	Carriage Bolt 3/8 x 1"
27	1	62956800	Belt Cover & Brush
28	2	30158000	Inner Skirtboard
29	2	30157200	Nylon Skirtboard
30	2	30159800	Outer Skirtboard
31	14	333633	HHCS 1/4 x 1 1/4"
32	1	30204200	Tail Door
33	48	01200500	Screw 5/16 x 3/4 Washer Head Self-Tap
34	1	30212500	Tail Guard Mount
35	1	30373500	Shaft Guard Top Short
36	1	30374300	Shaft Guard Bottom Short
37	2	337758	Set Screw 1/4-20 x 1/4"
38	2	30721500	Spout Guard
39	4	01144500	HHCS 5/16" x 3/4"
40	4	331363	Nylock ½"
41	1	62997200	Flex Hopper Assembly

40' BeltVeyor - Electric
Drive and Undercarriage

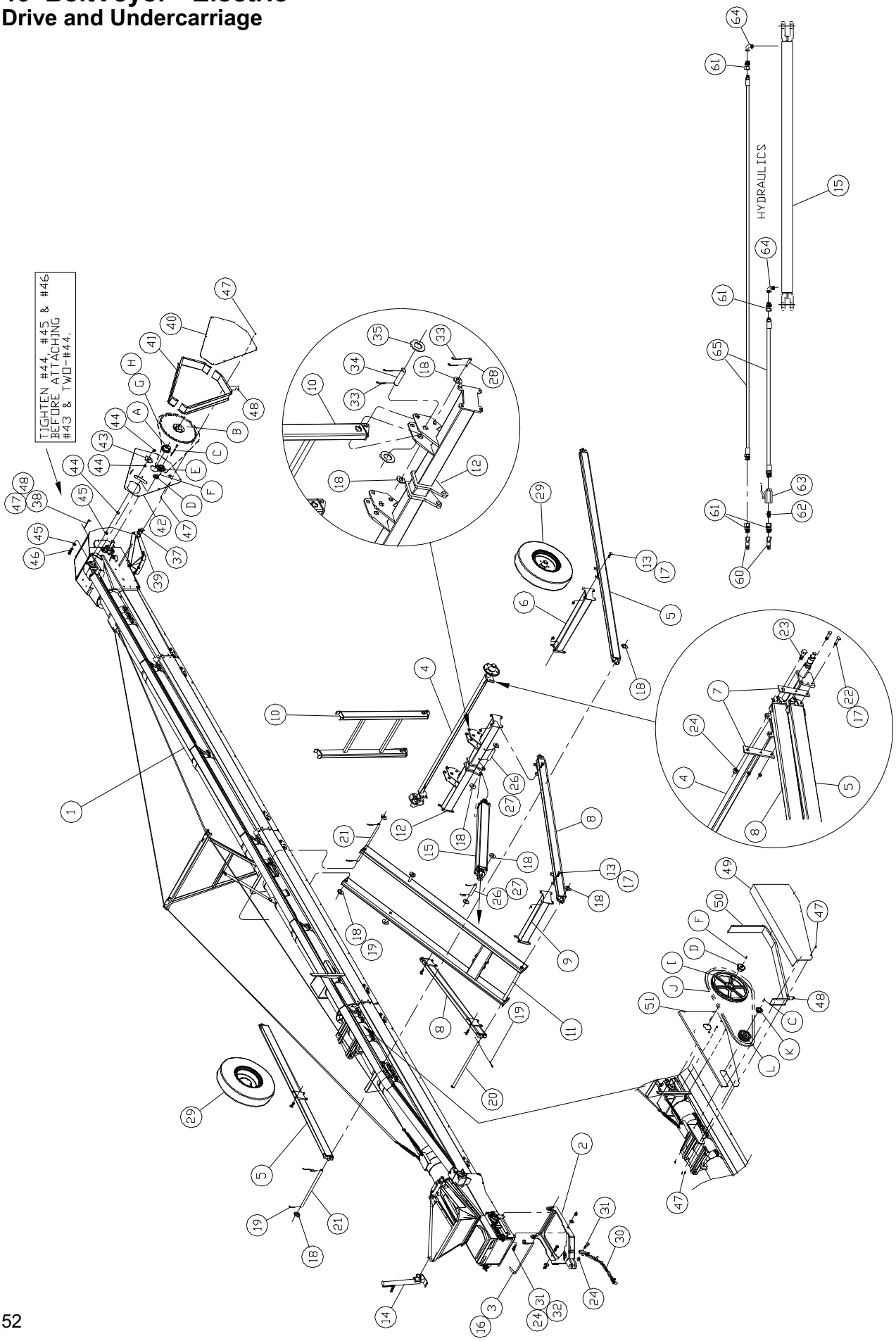

40' BeltVeyor - Electric
Drive and Undercarriage

#90871500

Item	Qty	Part No.	Description
1	1	62989900	Conveyor Assembly
2	1	82745100	Pivot Hitch
3	1	30243000	Pivot Hitch Handle
4	1	71022800	Axle & Hub Assembly
5	2	82909300	Axle Arm
6	1	82914300	Axle Arm Cross Brace
7	4	15999600	Axle Bracket
8	2	82910100	Lower Lift Arm
9	1	82913500	Upper Cross Brace
10	2	82915000	Upright
11	1	82912700	Upper Lift Arm
12	1	82911900	Lower Cylinder Bar
13	24	01140300	Carriage Bolt ½" x 2"
14	1	531558	Jack 20,000# Side Crank Bottom Mount
15	1	02858900	Hydraulic Cylinder 3 x 30
16	1	330928	Klik Pin 3/16"
17	28	331363	Nylock ½"
18	15	330407	Flat Washer 1"
19	5	336081	Cotter Pin 1/4 x 3"
20	1	82825100	Pivot Pin
21	2	30764500	Axle Arm Shaft
22	4	335422	HHCS ½" x 2½"
23	2	335174	HHCS 3/4" x 2½"
24	5	330316	Nylock 3/4"
25			
26	2	14288500	Pin 1" x 5 1/8"
27	4	02154300	Cotter Pin 5/32" x 1 3/4"
28	2	18972000	Pin 1" x 4 3/4"
29	2	807313	Tire & Rim 9.5L x 15 6Ply 5 bolt rim
30	1	433938	Safety Chain 11,000#
31	3	02307700	HHCS 3/4" x 3"
32	2	330340	Flat Washer 3/4"
33	6	02288900	Cotter Pin 3/16" x 2"
34	2	14402200	Pin 1 1/4" x 4 3/4"
35	4	330415	Flat Washer 1 1/4"
36			
37	2	01200500	Screw 5/16 x 3/4" Washer Head Self Tap
38	1	30732200	Head Guard Bracket Top
39	1	30331300	Head Guard Bracket Side
40	1	30197800	Guard Cover
41	2	30198600	Guard Side
42	1	30196000	Guard Back Plate
43	1	04074100	Idler Sprocket #80-12T
44	3	330571	Hex Nut 5/8"
45	2	330183	Flat Washer 5/8"
46	1	04121000	HHCS 5/8" x 3"
47	64	01057900	HHCS 1/4" x 3/4"
48	64	330522	Nylock 1/4"
49	1	30211700	Sheave Guard Cover
50	1	30218200	Tail Guard Side
51	1	30221600	Tail Guard Back Plate
60	2	465385	Coupler Male ¾ FOR
61	4	466912	Adapter Straight ¾ MOR / ½ NPTF
62	1	00627000	Adapter Straight ½ NPTM / ½ NPTM
63	1	03227600	Hyd. Ball Valve ½ NPTF
64	2	463513	Adapter 90° -Restrictor ½ NPTM / ⅜ NPTF Sw
65	2	61471900	Hose ⅜ x 720" ½ NPTM / ⅜ NPTM

40' Electric Drive Options

Description	#63079800 380 FPM	#63009500 457 FPM	#63010300 578 FPM	#63014500 706 FPM	#63081400 858 FPM
A- Bushing	00730200	00730200	00730200	00730200	00730200
B- Sprocket	03163300	03163300	03163300	01304500	01304500
C- Key	20072500	20072500	20072500	20072500	20072500
D- Bushing	04332300	04332300	04332300	04332300	04332300
E- Sprocket	01303700	01303700	01303700	01303700	01303700
F- Key	10490100	10490100	10490100	10490100	10490100
G- Chain	30333900	30333900	30333900	30334700	30334700
H- Connector	00232900	00232900	00232900	00232900	00232900
I- Sheave	04285300	04285300	04285300	04285300	04285300
J- V-Belt	03578200	03562600	01014000	03578200	03562600
K- Bushing	04322400	04322400	01855600	04322400	04322400
L- Sheave	04371100	04303400	04425500	04371100	04303400

40' BeltVeyor - PTO
Head,Tail, and Pan

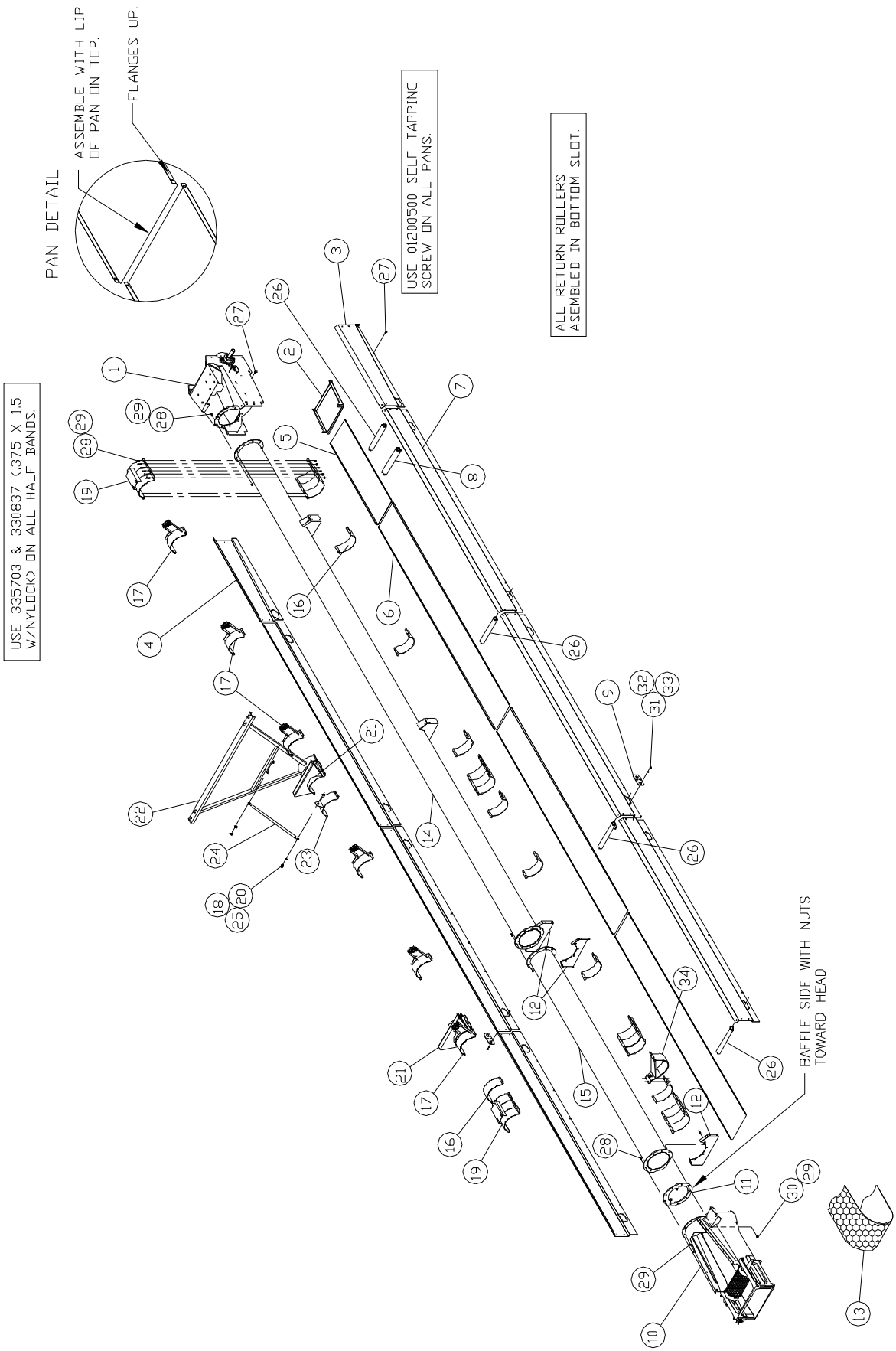

40' BeltVeyor - PTO
Head, Tail and Pan

Dimensions from end of tube to half bands.

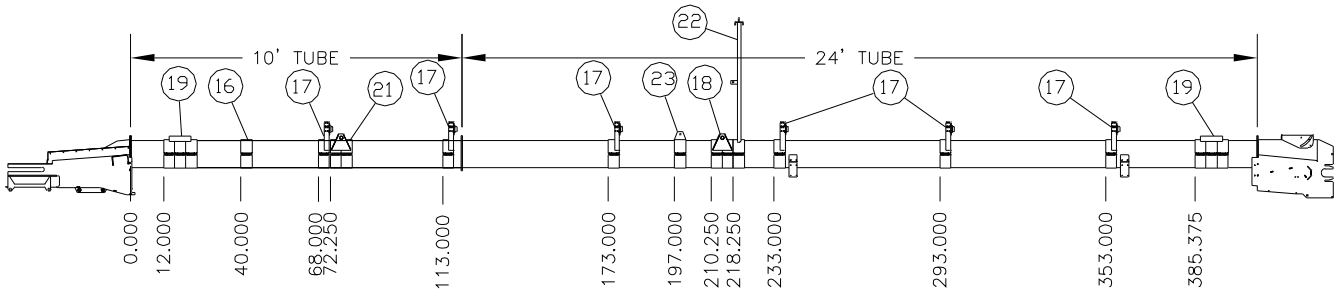

#63113500

Item	Qty	Part No.	Description
1	1	63086300	Head Assembly -10" Roller
2	1	30720700	Head Pan
3	1	30719900	Pan Side 4' Right
4	1	30161400	Pan Side 4' Left
5	1	30162200	Pan 4'
6	3	30164800	Pan 10'
7	6	30163000	Pan Side 10'
8	1	60196300	Plastic Roller 2 3/8"
9	14	30328900	Roller Slot Cover
10	1	62951900	Tail Assembly
11	1	82762600	Baffle
12	3	30731400	Tail Mount
13	1	62994900	Honeycomb Belt 16" x 79'-2"
14	1	82716200	Tube 10" x 24'
15	1	82081100	Tube 10" x 10'
16	20	10319210	Half Band 4 x 10
17	6	63085500	Bearing Mount Assembly
18	2	01180900	HHCS ½" x 1 1/4"
19	2	82737800	Cable Mount
20	2	330159	Flat Washer ½"
21	2	82907700	Axle Mount
22	1	82739400	Truss Long
23	1	82742800	Truss Brace
24	1	17122300	Truss Arm
25	2	331363	Nylock ½"
26	4	63104400	Plastic Roller 2"
27	112	01200500	Screw 5/16 x 3/4 Washer Head Self-Tap
28	101	335703	HHCS 3/8 x 1½"
29	103	330837	Nylock 3/8"
30	2	332890	Carriage Bolt 3/8" x 1 3/4"
31	28	337949	Carriage Bolt 1/4 x 3/4"
32	28	02016400	Flat Washer 1/4"
33	28	330522	Nylock 1/4"
34	1	62056700	PTO Shaft Carrier

40' Beltveyor - PTO
Conveyor Parts

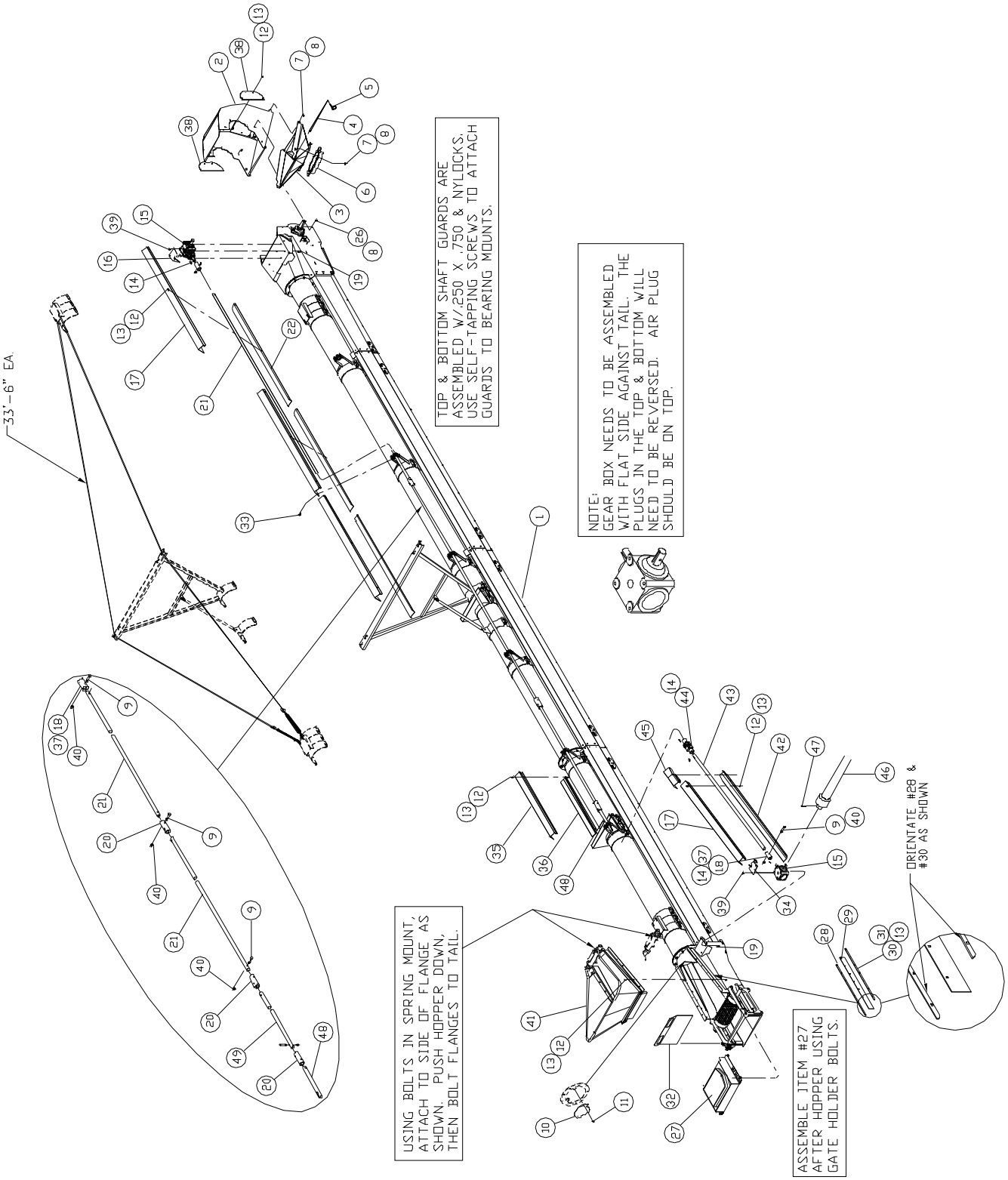

40' BeltVeyor - PTO
Conveyor Parts

#63114300

Item	Qty	Part No.	Description
1	1	63113500	Head-Tail-Tube Assembly
2	1	63022800	Spout Top w/lining
3	1	82779000	Spout Bottom -10" Round
4	1	30302400	Spout Pin
5	2	330928	Klik Pin 3/16"
6	1	82791500	10" Spout Tube
7	11	01145200	HHCS 3/8 x 3/4"
8	17	330837	Nylock 3/8"
9	8	331926	HHCS ½" x 2"
10	1	30337000	Baffle Plate
11	2	01017300	HHCS 3/8" x 1"
12	54	01057900	HHCS 1/4" x 3/4"
13	68	330522	Nylock 1/4"
14	3	10490100	Key 1/4 x 1 1/4"
15	2	04007100	Gear Box
16	1	30213300	Head Guard Mount
17	5	30200000	Shaft Guard Top Long
18	2	30202600	Sleeve w/keyway
19	8	01010800	HHCS 5/16" x 1"
20	3	30203400	Shaft Sleeve
21	2	30773600	Drive Shaft
22	4	30199400	Shaft Guard Bottom Long
23	47'	01506500	Cable 3/8 x 19
24	8	01502400	Cable Clamp 3/8
25	2	04151700	Turnbuckle 5/8" x 9
26	6	330654	Carriage Bolt 3/8 x 1"
27	1	62956800	Belt Cover & Brush
28	2	30158000	Inner Skirtboard
29	2	30157200	Nylon Skirtboard
30	2	30159800	Outer Skirtboard
31	14	333633	HHCS 1/4 x 1 1/4"
32	1	30204200	Tail Door
33	40	01200500	Screw 5/16 x 3/4 Washer Head Self-Tap
34	1	30212500	Tail Guard Mount
35	1	30476600	Shaft Guard Top Short
36	1	30475800	Shaft Guard Bottom Short
37	2	337758	Set Screw 1/4-20 x 1/4"
38	2	30721500	Spout Guard
39	4	01144500	HHCS 5/16" x 3/4"
40	8	331363	Nylock ½"
41	1	62997200	Flex Hopper Assembly
42	1	30477400	Shaft Guard -Bottom Drive
43	1	30472500	Shaft -Bottom Drive
44	1	04120200	U-Joint 12N 1 1/4 x 1 1/4 Round
45	1	30474100	Guard Splice
46	1	06273700	PTO Shaft
47	1	08993800	Roll Pin 1/4" x 2"
48	1	30473300	Keyed Shaft
49	1	30787600	Lower Drive Shaft

40' Beltveyor - PTO
Drive and Undercarriage

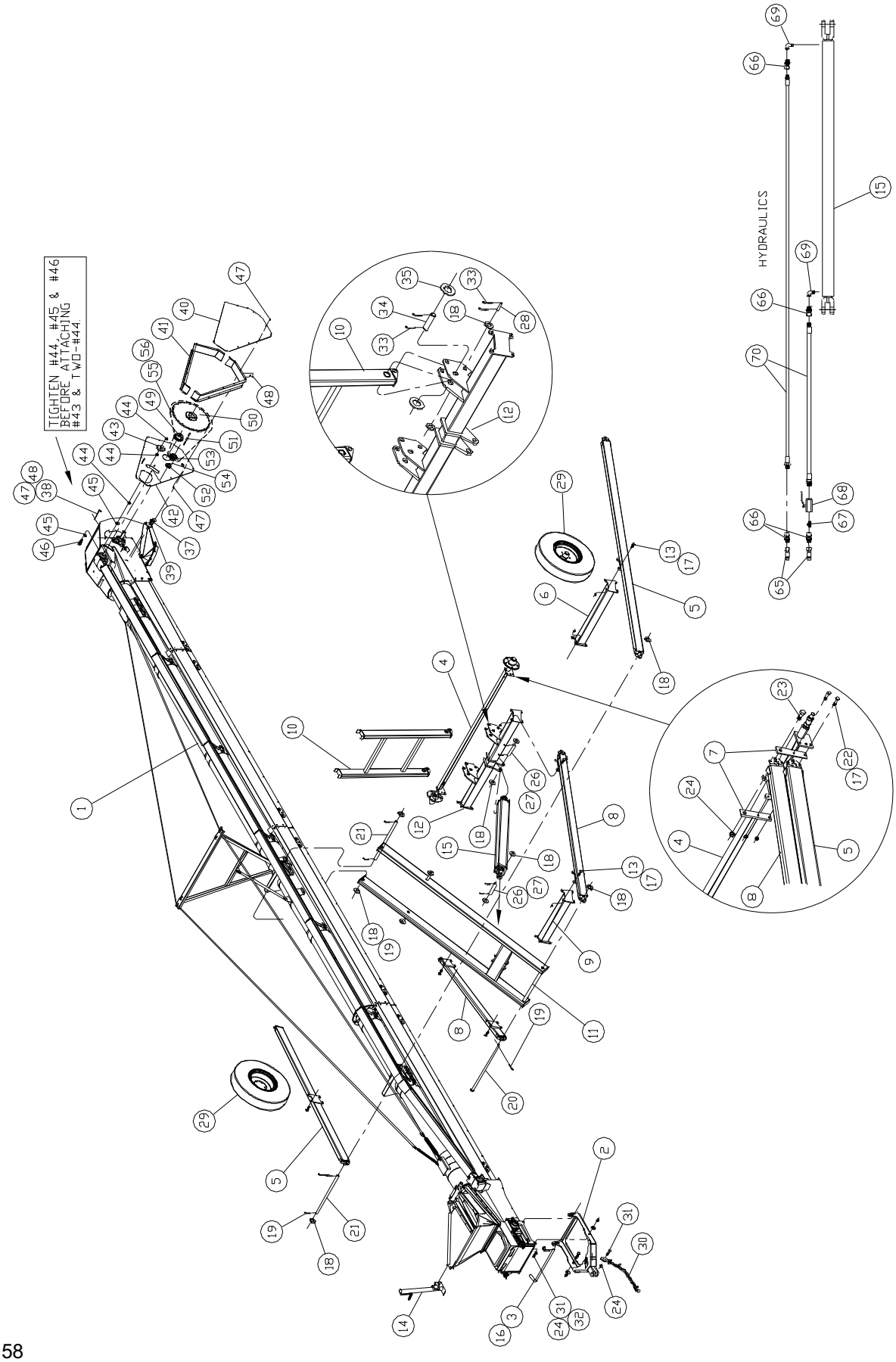

40' BeltVeyor - PTO
Drive and Undercarriage

#90901000

Item	Qty	Part No.	Description
1	1	63114300	Conveyor Assembly
2	1	82745100	Pivot Hitch
3	1	30243000	Pivot Hitch Handle
4	1	71022800	Axle & Hub Assembly
5	2	82909300	Axle Arm
6	1	82914300	Axle Arm Cross Brace
7	4	15999600	Axle Bracket
8	2	82910100	Lower Lift Arm
9	1	82913500	Upper Cross Brace
10	1	82915000	Upright
11	1	82912700	Upper Lift Arm
12	1	82911900	Lower Cylinder Bar
13	24	01140300	Carriage Bolt ½" x 2"
14	1	531558	Jack 20,000# Side Crank Bottom Mount
15	1	02858900	Hydraulic Cylinder 3 x 30
16	1	330928	Klik Pin 3/16"
17	28	331363	Nylock ½"
18	15	330407	Flat Washer 1"
19	5	336081	Cotter Pin 1/4 x 3"
20	1	82825100	Pivot Pin
21	2	30764500	Axle Arm Shaft
22	4	335422	HHCS ½" x 2½"
23	2	335174	HHCS 3/4" x 2½"
24	5	330316	Nylock 3/4"
25			
26	2	14288500	Pin 1" x 5 1/8"
27	4	02154300	Cotter Pin 5/32" x 1 3/4"
28	2	18972000	Pin 1" x 4 3/4"
29	2	807313	Tire & Rim 9.5L x 15 6Ply 5 bolt rim
30	1	433938	Safety Chain 11,000#
31	3	02307700	HHCS 3/4" x 3"
32	2	330340	Flat Washer 3/4"
33	6	02288900	Cotter Pin 3/16" x 2"
34	2	14402200	Pin 1 1/4" x 4 3/4"
35	4	330415	Flat Washer 1 1/4"
36	2	330597	Nylock 1"
37	2	01200500	Screw 5/16 x 3/4" Washer Head Self Tap
38	1	30732200	Head Guard Bracket Top
39	1	30331300	Head Guard Bracket Side
40	1	30197800	Guard Cover
41	2	30198600	Guard Side
42	1	30196000	Guard Back Plate
43	1	04074100	Idler Sprocket #80-12T
44	3	330571	Hex Nut 5/8"
45	2	330183	Flat Washer 5/8"
46	1	04121000	HHCS 5/8" x 3"
47	31	01057900	HHCS 1/4" x 3/4"
48	31	330522	Nylock 1/4"
49	1	00730200	Bushing 1½" SF QD
50	1	01420900	Sprocket #80 26T SF
51	3	20072500	Key 3/8" x 2"
52	1	04332300	Bushing 1" SK
53	1	01303700	Sprocket #80 15T SK
54	4	10490100	Key 1/4" x 1 1/4"
55	1	14498000	Chain #80 x 60P
56	1	00232900	Chain #80 Connector
65	2	465385	Coupler Male ¾ FOR
66	4	466912	Adapter Straight ¾ MOR / ½ NPTF
67	1	00627000	Adapter Straight ½ NPTM / ½ NPTM
68	1	03227600	Hyd. Ball Valve ½ NPTF
69	2	463513	Adapter 90° -Restrictor ½ NPTM / ⅜ NPTF Sw
70	2	61471900	Hose ⅜ x 720" ½ NPTM / ⅜ NPTM

40' BeltVeyor - Hydraulic
Head, Tail and Pan

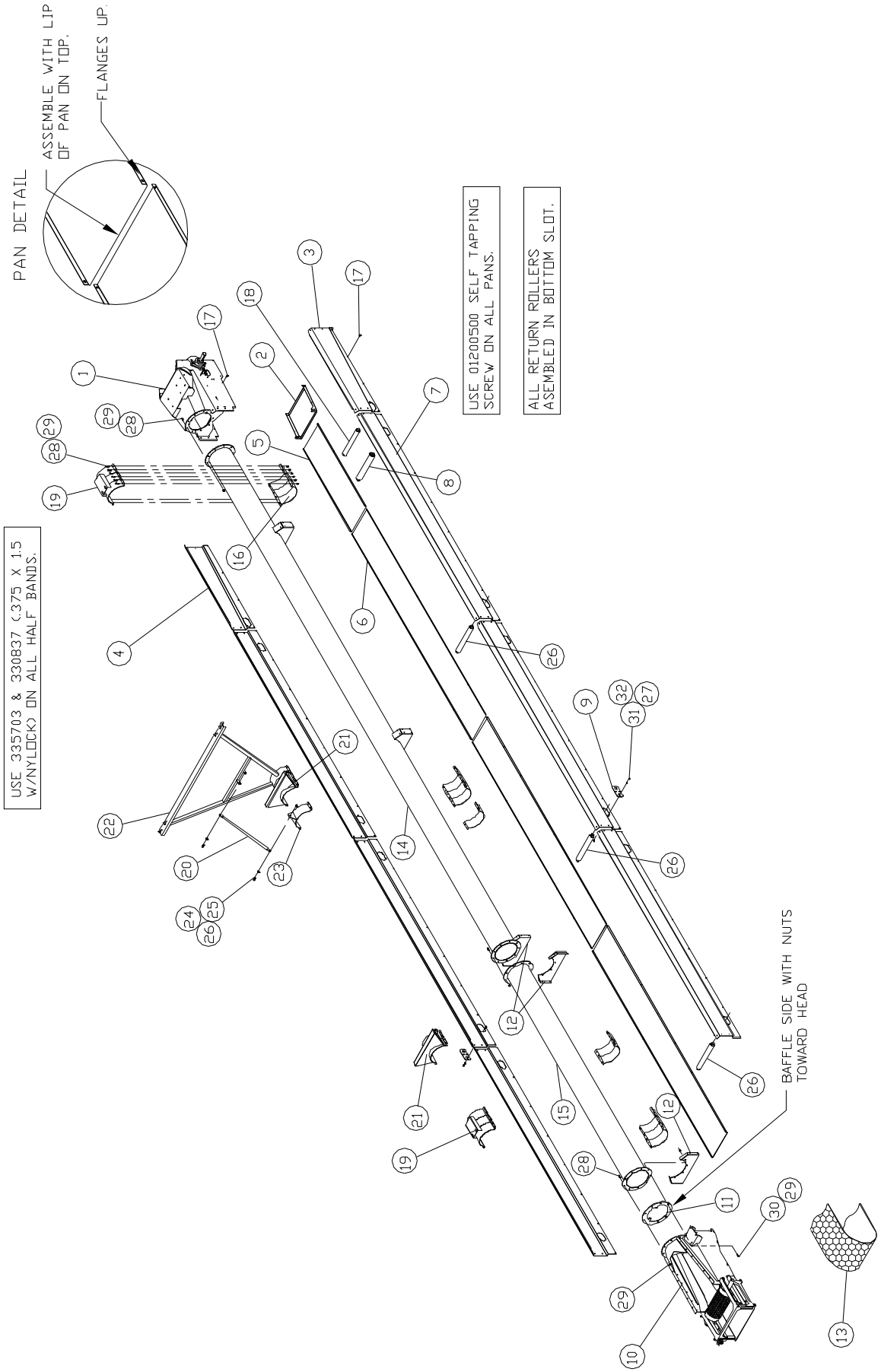

40' BeltVeyor - Hydraulic
Head, Tail and Pan

Dimensions from end of tube to half bands.

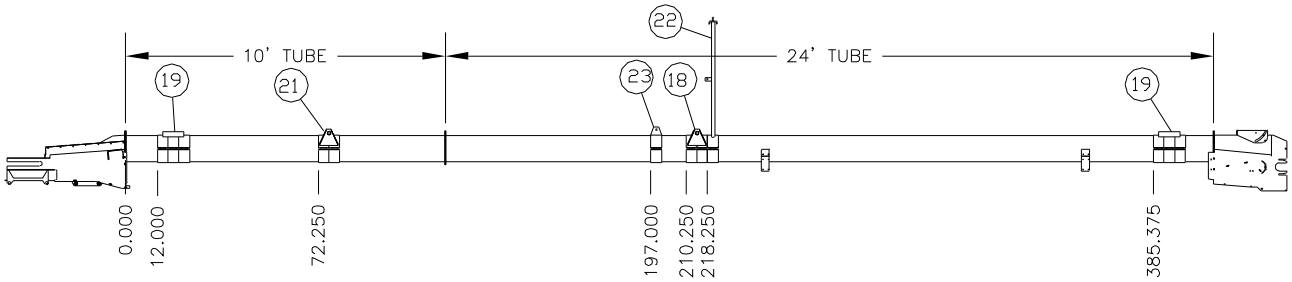

#63119200

Item	Qty	Part No.	Description
1	1	63086300	Head Assembly -10" Roller
2	1	30720700	Head Pan
3	1	30719900	Pan Side 4' Right
4	1	30161400	Pan Side 4' Left
5	1	30162200	Pan 4'
6	3	30164800	Pan 10'
7	6	30163000	Pan Side 10'
8	1	60196300	Plastic Roller 2 3/8"
9	14	30328900	Roller Slot Cover
10	1	62951900	Tail Assembly
11	1	82762600	Baffle
12	3	30731400	Tail Mount
13	1	62994900	Honeycomb Belt 16" x 79'-2"
14	1	82716200	Tube 10" x 24'
15	1	82081100	Tube 10" x 10'
16	12	10319210	Half Band 4 x 10
17	112	01200500	Screw 5/16 x 3/4 Washer Head Self-Tap
18	4	63104400	Plastic Roller 2"
19	2	82737800	Cable Mount
20	1	17122300	Truss Arm
21	2	82907700	Axle Mount
22	1	82739400	Truss Long
23	1	82742800	Truss Brace
24	2	01180900	HHCS ½" x 1 1/4"
25	2	330159	Flat Washer ½"
26	2	331363	Nylock ½"
27	28	330522	Nylock 1/4"
28	73	335703	HHCS 3/8 x 1½"
29	75	330837	Nylock 3/8"
30	2	332890	Carriage Bolt 3/8" x 1 3/4"
31	28	337949	Carriage Bolt 1/4 x 3/4"
32	28	02016400	Flat Washer 1/4"

40' Beltveyor - Hydraulic
Conveyor Parts

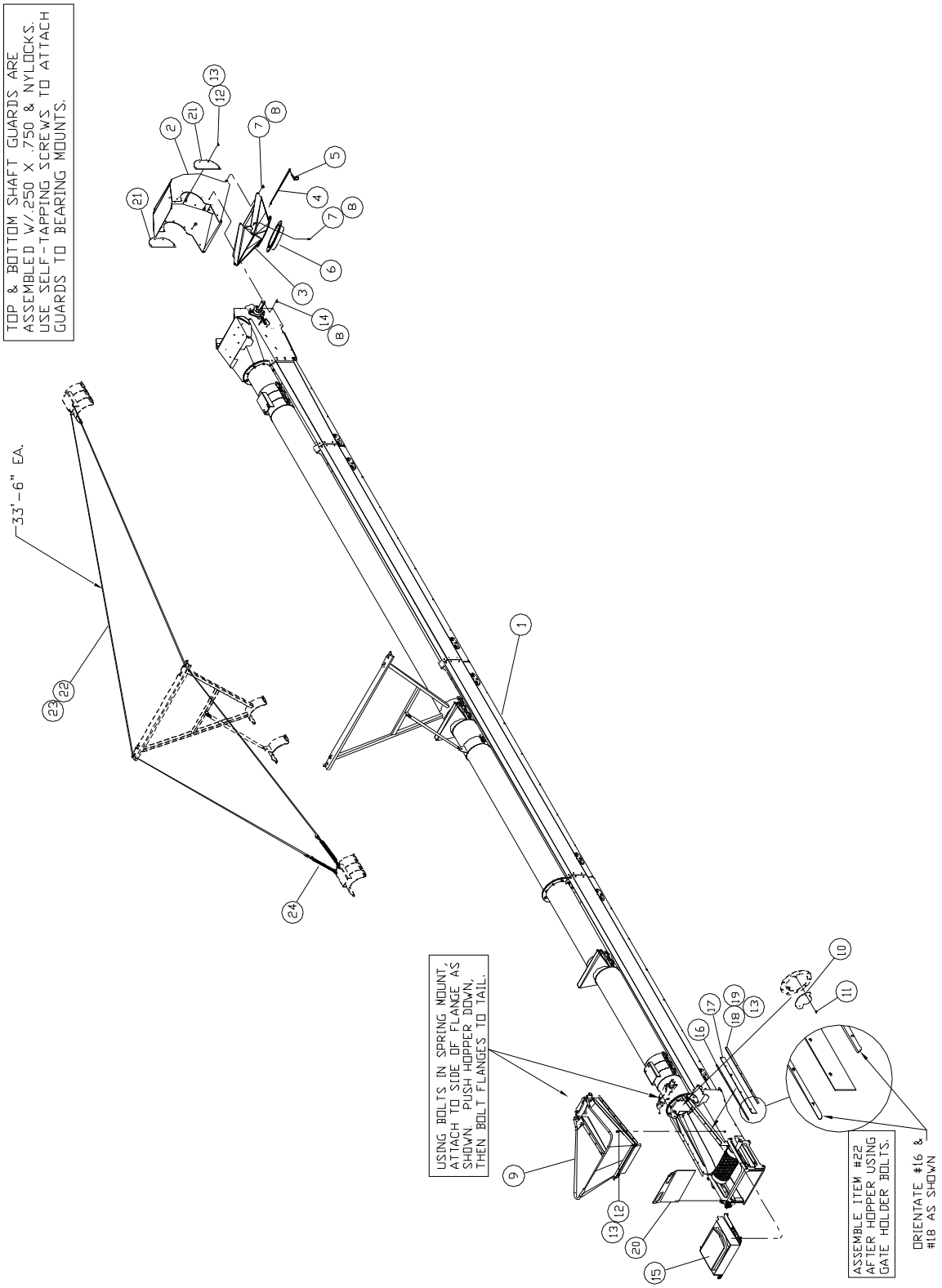

40' Beltveyor - Hydraulic
Conveyor Parts

#63120000

Item	Qty	Part No.	Description
1	1	63119200	Head-Tail-Tube Assembly
2	1	63022800	Spout Top w/lining
3	1	82779000	Spout Bottom -10" Round
4	1	30302400	Spout Pin
5	2	330928	Klik Pin 3/16"
6	1	82791500	10" Spout Tube
7	11	01145200	HHCS 3/8 x 3/4"
8	17	330837	Nylock 3/8"
9	1	62997200	Flex Hopper Assembly
10	1	30337000	Baffle Plate
11	2	01017300	HHCS 3/8" x 1"
12	16	01057900	HHCS 1/4" x 3/4"
13	30	330522	Nylock 1/4"
14	6	330654	Carriage Bolt 3/8" x 1"
15	1	62956800	Belt Cover & Brush
16	2	30158000	Inner Skirtboard
17	2	30157200	Nylon Skirtboard
18	2	30159800	Outer Skirtboard
19	14	333633	HHCS 1/4 x 1 1/4"
20	1	30204200	Tail Door
21	2	30721500	Spout Guard
22	47'	01506500	Cable 3/8 x 19
23	8	01502400	Cable Clamp 3/8
24	2	04151700	Turnbuckle 5/8" x 9

40' Beltveyor - Hydraulic
Drive and Undercarriage

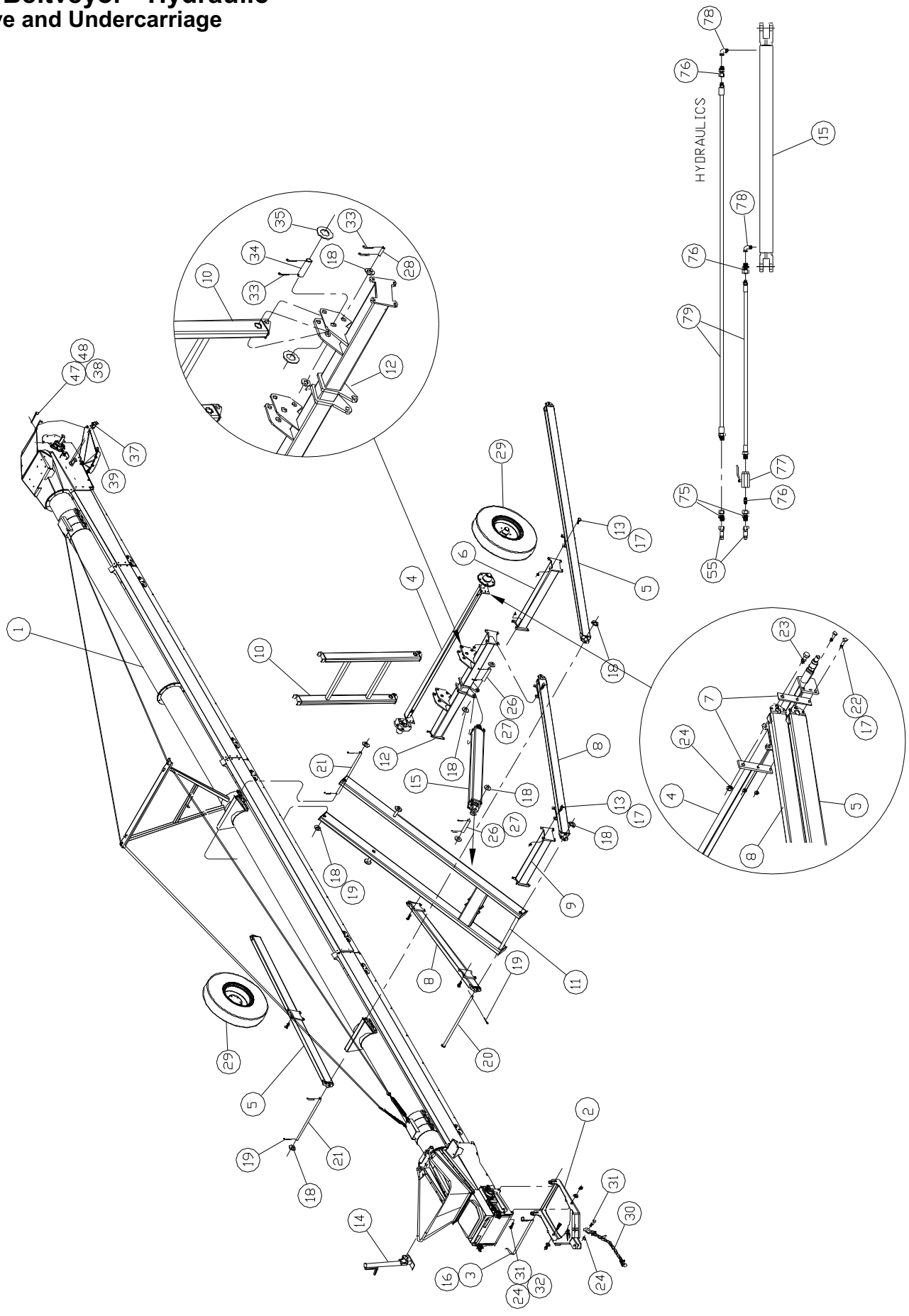

40' Beltveyor - Hydraulic
Drive and Undercarriage

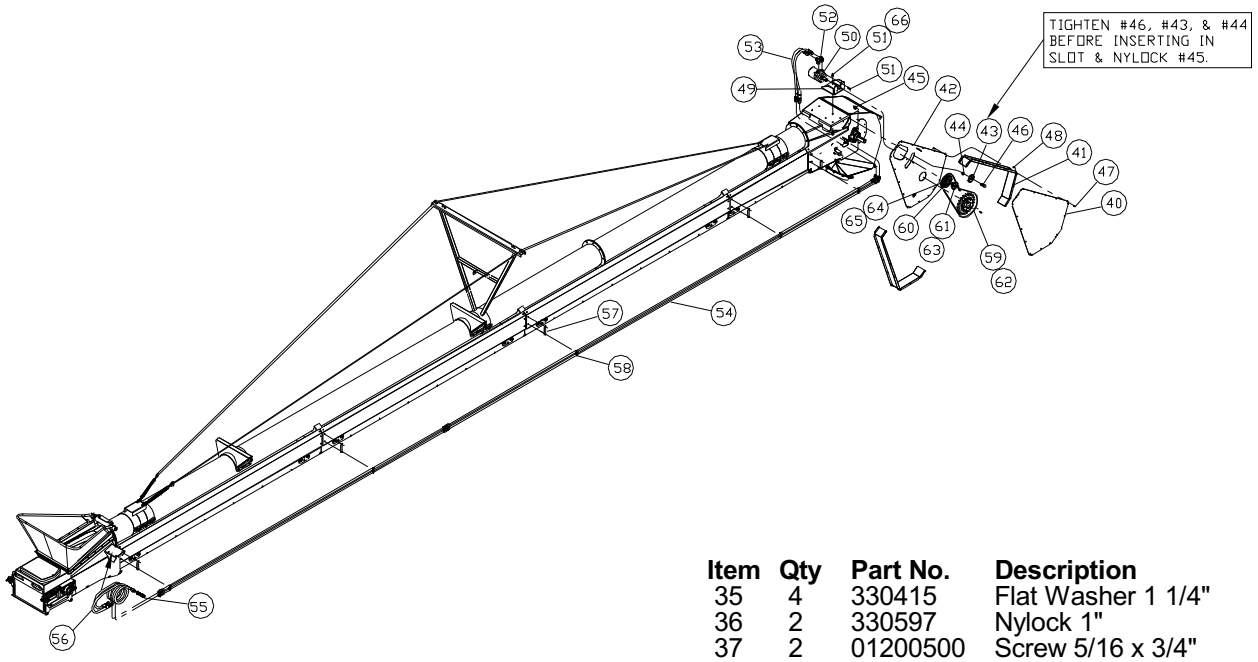

#90904400

Item	Qty	Part No.	Description
1	1	63120000	Conveyor Assembly
2	1	82745100	Pivot Hitch
3	1	30243000	Pivot Hitch Handle
4	1	71022800	Axle & Hub Assembly
5	2	82909300	Axle Arm
6	1	82914300	Axle Arm Cross Brace
7	4	15999600	Axle Bracket
8	2	82910100	Lower Lift Arm
9	1	82913500	Upper Cross Brace
10	1	82915000	Upright
11	1	82912700	Upper Lift Arm
12	1	82911900	Lower Cylinder Bar
13	24	01140300	Carriage Bolt ½" x 2"
14	1	531558	Jack 20,000# Side Crank Bottom Mount
15	1	02858900	Hydraulic Cylinder 3 x 30
16	1	330928	Klik Pin 3/16"
17	28	331363	Nylock ½"
18	15	330407	Flat Washer 1"
19	5	336081	Cotter Pin 1/4 x 3"
20	1	82825100	Pivot Pin
21	2	30764500	Axle Arm Shaft
22	4	335422	HHCS ½" x 2½"
23	2	335174	HHCS 3/4" x 2½"
24	5	330316	Nylock 3/4"
25			
26	2	14288500	Pin 1" x 5 1/8"
27	4	02154300	Cotter Pin 5/32" x 1 3/4"
28	2	18972000	Pin 1" x 4 3/4"
29	2	807313	Tire & Rim 9.5L x 15 6Ply 5 bolt rim
30	1	433938	Safety Chain 11,000#
31	3	02307700	HHCS 3/4" x 3"
32	2	330340	Flat Washer 3/4"
33	6	02288900	Cotter Pin 3/16" x 2"
34	2	14402200	Pin 1 1/4" x 4 3/4"
35	4	330415	Flat Washer 1 1/4"
36	2	330597	Nylock 1"
37	2	01200500	Screw 5/16 x 3/4" Washer Head Self Tap
38	1	30732200	Head Guard Bracket Top
39	1	30331300	Head Guard Bracket Side
40	1	30197800	Guard Cover
41	2	30198600	Guard Side
42	1	30196000	Guard Back Plate
43	1	04046900	Idler Sprocket #60-13T
44	1	330571	Hex Nut 5/8"
45	1	01572700	Nylock 5/8"
46	1	04121000	HHCS 5/8" x 3"
47	41	01057900	HHCS 1/4" x 3/4"
48	41	330522	Nylock 1/4"
49	1	30789200	Motor Mount
50	1	04148300	Hydraulic Motor
51	8	01017300	HHCS 3/8" x 1"
52	2	00542100	Adapter 45° 7/8 MOR/ 7/8 JICM
53	2	02125300	Hose ½" x 29½" 7/8" JICF Sw
54	2	63126700	Hydraulic Line 5/8" x 414"
55		465385	Male Coupler 3/4 FOR
56	2	472936	Hose ½" x 114"
57	5	30788400	Clamp Bracket
58	10	00613000	Hose Clamp 5/8
59	1	80145600	Sprocket #60 48T 1½"
60	1	00967000	Sprocket #60 21T SDS
61	1	04264800	Bushing 1" SDS
62	1	20072500	Key 3/8" x 2"
63	1	10490100	Key 1/4" x 1 1/4"
64	1	16831000	Chain #60 x 89 Pitches
65	1	02044600	Chain #60 Connector
66	4	330837	Nylock 3/8"
75	4	466912	Adapter Straight ¾ MOR / ½ NPTF
76	1	00627000	Adapter Straight ½ NPTM / ½ NPTM
77	1	03227600	Hyd. Ball Valve ½ NPTF
78	2	463513	Adapter 90° -Restrictor ½ NPTM / ⅜ NPTF Sw
79	2	61471900	Hose ⅜ x 720" ½ NPTM / ⅜ NPTM

50' BeltVeyor

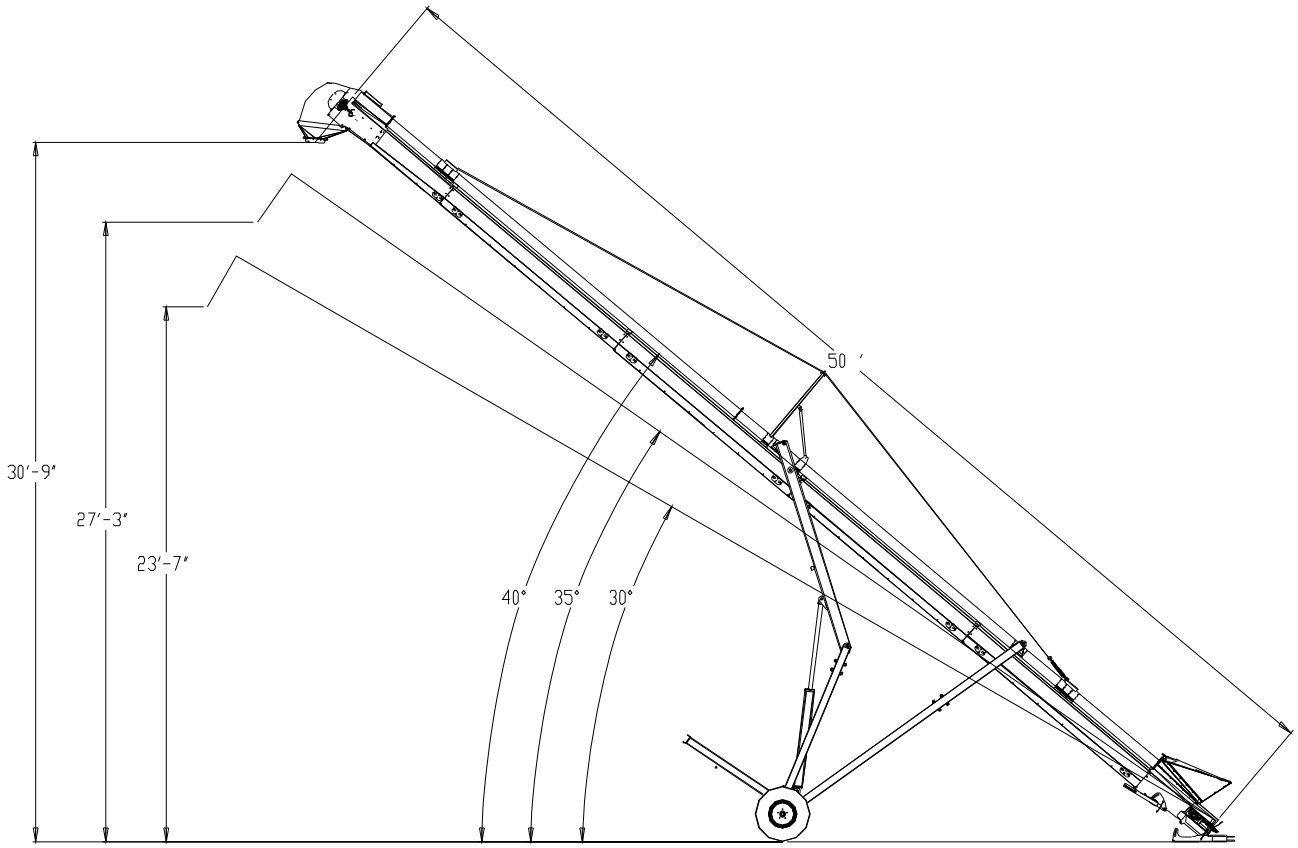

50'-16" Honeycomb Belt				50'-16" Crescent Belt			
ft/min	angle	bu/hr	hp	ft/min	angle	bu/hr	hp
380	30	3000	11.0	380	27	2700	10.0
380	35	2750	11.4				
380	40	2500	11.9				
457	30	3499	12.0	457	27	3000	12.1
457	35	3207	12.5				
457	40	2916	13.0				
578	30	4254	13.5	576	27	3410	12.6
578	35	3899	14.1				
578	40	3545	14.7				
706	30	5052	15.2	706	27	3750	14.3
706	35	4631	15.8				
706	40	4210	16.5				
858	30	6000	16.8	858	27	4000	15.0
858	35	5500	17.5				
858	40	5000	18.2				

All bu/hr was done with 60 lb/bu wheat @ 12%-15% moisture

Undercarriage -	hydraulic	
Available drives -	Electric	
	PTO	
Electric -	20 hp minimum	
	Use 3 phase @1800 RPM	
PTO -	Use 540 PTO	
Drive Type -	Head drive jack-shaft style	
Belt -	16" Honeycomb cleat	
	16" crescent	
Maximum angle -	Crescent	27 degrees
	Honeycomb	40 plus degrees

Operations above recommended angle WILL result in damage to unit.

50' BeltVeyor - Electric
Head, Tail and Pan

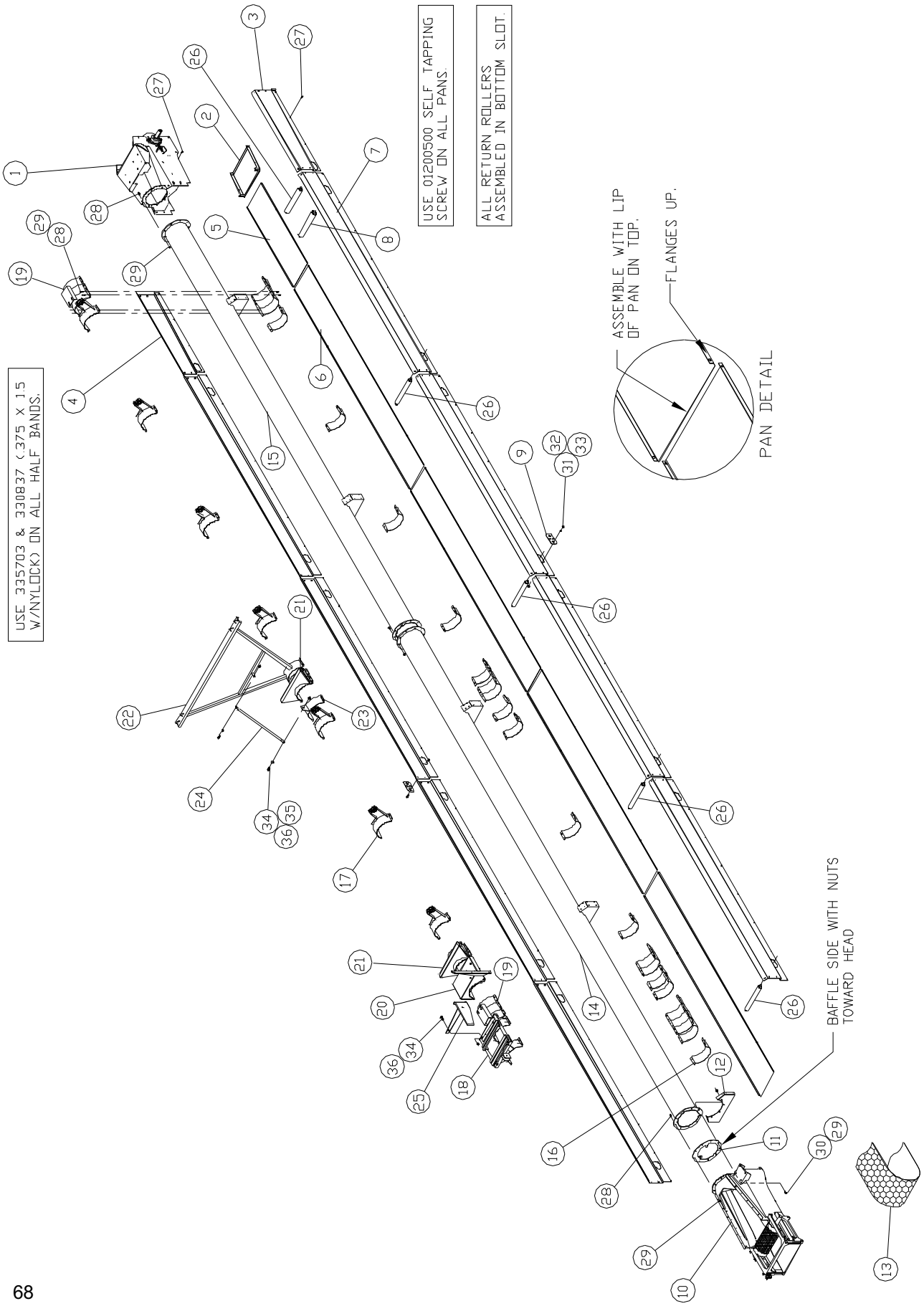

50' BeltVeyor - Electric
Head, Tail and Pan

Dimensions from end of tube to half bands.

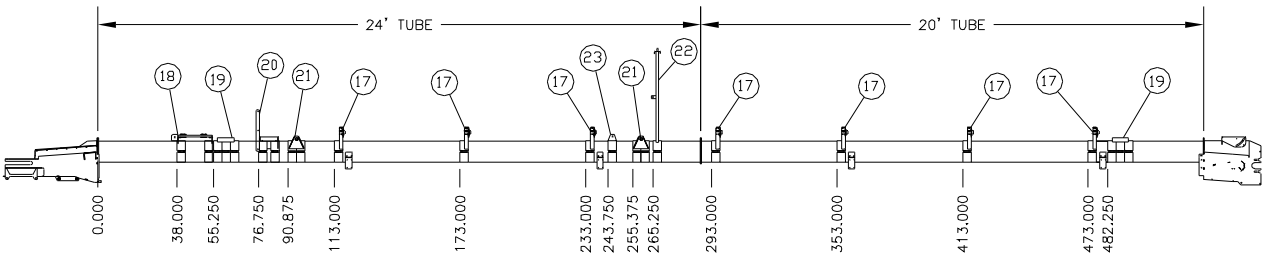

#63061600

Item	Qty	Part No.	Description
1	1	63086300	Head Assembly -10" Roller
2	1	30720700	Head Pan
3	1	30719900	Pan Side 4' Right
4	1	30161400	Pan Side 4' Left
5	1	30162200	Pan 4'
6	4	30164800	Pan 10'
7	8	30163000	Pan Side 10'
8	1	60196300	Plastic Roller 2 3/8"
9	18	30328900	Roller Slot Cover
10	1	62951900	Tail Assembly
11	1	82762600	Baffle
12	1	30731400	Tail Mount
13	1	63063200	Honeycomb Belt 16" x 98'-11"
14	1	82716200	Tube 10" x 24'
15	1	82717000	Tube 10" x 20'
16	23	10319210	Half Band 4 x 10
17	7	63085500	Bearing Mount Assembly
18	1	81879900	Electric Motor Mount
19	2	82737800	Cable Mount
20	1	82729500	Gear Box Mount
21	2	82907700	Axle Mount
22	1	82739400	Truss Long
23	1	82742800	Truss Brace
24	1	17122300	Truss Arm
25	1	30222400	Tail Guard Bracket
26	5	63104400	Plastic Roller 2"
27	140	01200500	Screw 5/16 x 3/4 Washer Head Self-Tap
28	117	335703	HHCS 3/8 x 1½"
29	119	330837	Nylock 3/8
30	2	332890	Carriage Bolt 3/8" x 1 3/4"
31	36	337949	Carriage Bolt 1/4 x 3/4"
32	36	02016400	Flat Washer 1/4"
33	36	330522	Nylock 1/4"
34	4	01180900	HHCS ½" x 1 1/4"
35	2	330159	Flat Washer ½"
36	4	331363	Nylock ½"

50' BeltVeyor - Electric
Conveyor Parts

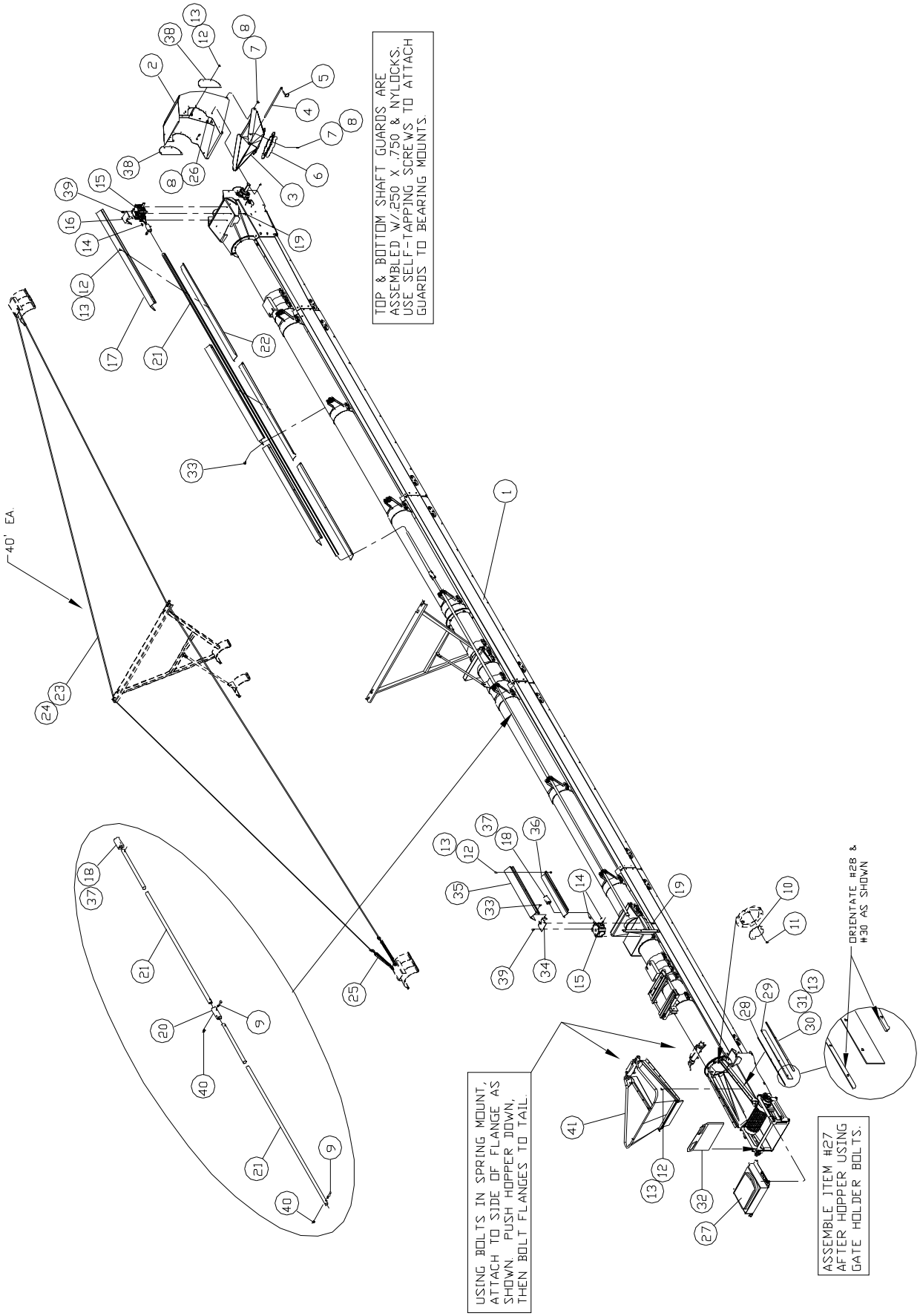

50' BeltVeyor - Electric
Conveyor Parts

#63062400

Item	Qty	Part No.	Description
1	1	63061600	Head-Tail-Tube Assembly
2	1	63022800	Spout Top w/lining
3	1	82779000	Spout Bottom -10" Round
4	1	30302400	Spout Pin
5	2	330928	Klik Pin 3/16"
6	1	82791500	10" Spout Tube
7	11	01145200	HHCS 3/8 x 3/4"
8	17	330837	Nylock 3/8"
9	4	331926	HHCS ½" x 2"
10	1	30337000	Baffle Plate
11	2	01017300	HHCS 3/8" x 1"
12	68	01057900	HHCS 1/4" x 3/4"
13	82	330522	Nylock 1/4"
14	3	10490100	Key 1/4 x 1 1/4"
15	2	04007100	Gear Box
16	1	30213300	Head Guard Mount
17	7	30200000	Shaft Guard Top Long
18	2	30202600	Sleeve w/keyway
19	8	01010800	HHCS 5/16" x 1"
20	1	30203400	Shaft Sleeve
21	2	30592000	Drive Shaft
22	7	30199400	Shaft Guard Bottom Long
23	80'	01506500	Cable 3/8 x 19
24	8	01502400	Cable Clamp 3/8
25	2	04151700	Turnbuckle 5/8" x 9
26	6	330654	Carriage Bolt 3/8 x 1"
27	1	62956800	Belt Cover & Brush
28	2	30158000	Inner Skirtboard
29	2	30157200	Nylon Skirtboard
30	2	30159800	Outer Skirtboard
31	14	333633	HHCS 1/4 x 1 1/4"
32	1	30204200	Tail Door
33	64	01200500	Screw 5/16 x 3/4 Washer Head Self-Tap
34	1	30212500	Tail Guard Mount
35	1	30373500	Shaft Guard Top Short
36	1	30374300	Shaft Guard Bottom Short
37	2	337758	Set Screw 1/4-20 x 1/4"
38	2	30721500	Spout Guard
39	4	01144500	HHCS 5/16" x 3/4"
40	4	331363	Nylock ½"
41	1	62997200	Flex Hopper Assembly

50' BeltVeyor - Electric
Drive and Undercarriage

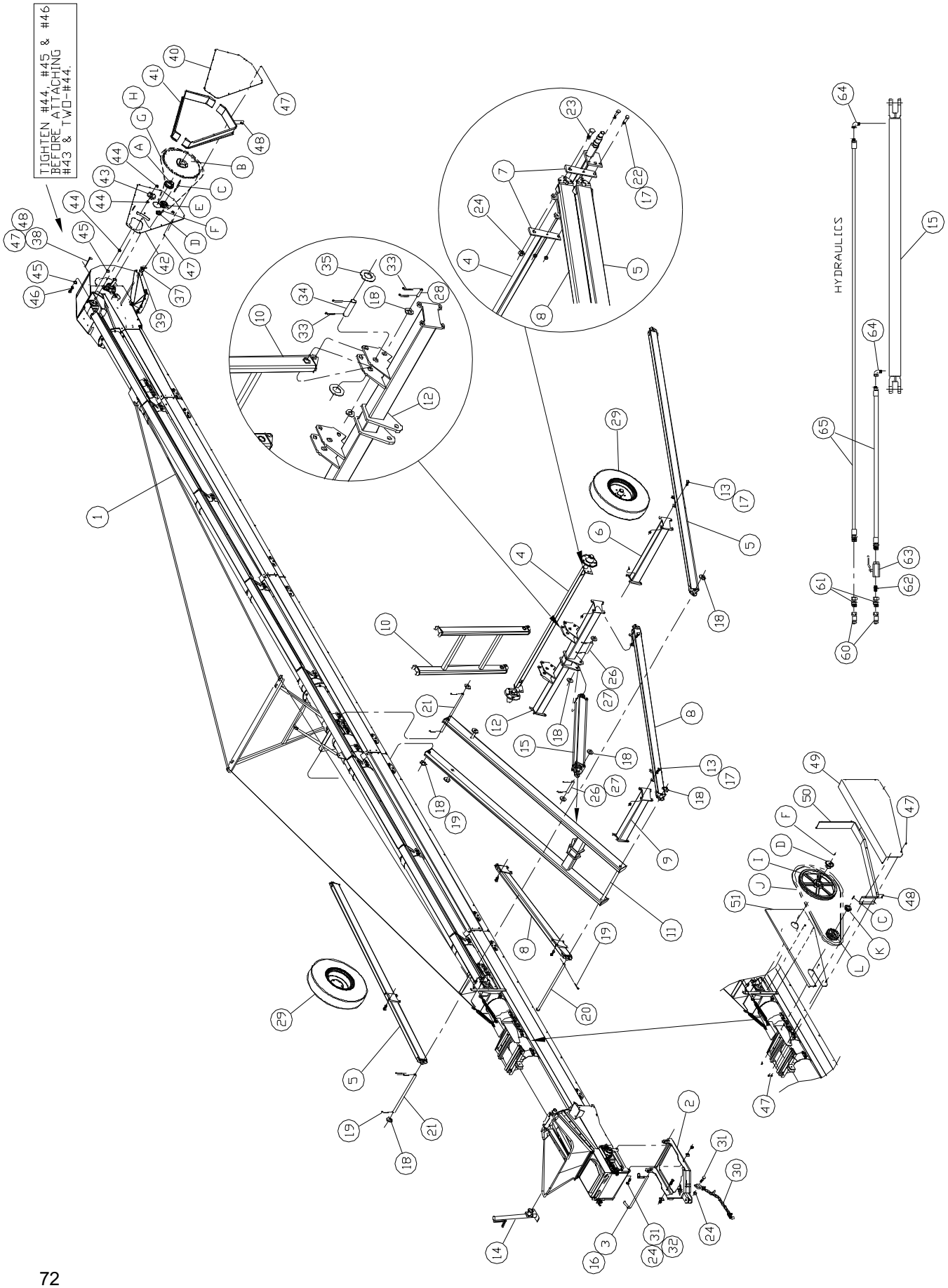

50' BeltVeyor - Electric
Drive and Undercarriage

#90887100

Item	Qty	Part No.	Description
1	1	63062400	Conveyor Assembly
2	1	82745100	Pivot Hitch
3	1	30243000	Pivot Hitch Handle
4	1	71022800	Axle & Hub Assembly
5	2	82823600	Axle Arm
6	1	82847500	Axle Arm Cross Brace
7	4	15999600	Axle Bracket
8	2	82850900	Lower Lift Arm
9	1	82824400	Upper Cross Brace
10	1	82828500	Upright
11	1	82846700	Upper Lift Arm
12	1	82822800	Lower Cylinder Bar
13	24	01140300	Carriage Bolt ½" x 2"
14	1	531558	Jack 20,000# Side Crank Bottom Mount
15	1	466953	Hydraulic Cylinder 4 x 48
16	1	330928	Klik Pin 3/16"
17	28	331363	Nylock ½"
18	18	330407	Flat Washer 1"
19	5	336081	Cotter Pin 1/4 x 3"
20	1	82825100	Pivot Pin
21	2	30764500	Axle Arm Shaft
22	4	335422	HHCS ½" x 2½"
23	2	335174	HHCS 3/4" x 2½"
24	5	330316	Nylock 3/4"
25			
26	2	14288500	Pin 1" x 5 1/8"
27	4	02154300	Cotter Pin 5/32" x 1 3/4"
28	2	18972000	Pin 1" x 4 3/4"
29	2	807313	Tire & Rim 9.5L x 15 6Ply 5 bolt rim
30	1	433938	Safety Chain 11,000#
31	3	02307700	HHCS 3/4" x 3"
32	2	330340	Flat Washer 3/4"
33	6	02288900	Cotter Pin 3/16" x 2"
34	2	14402200	Pin 1 1/4" x 4 3/4"
35	4	330415	Flat Washer 1 1/4"
36	2	330597	Nylock 1"
37	2	01200500	Screw 5/16 x 3/4" Washer Head Self Tap
38	1	30732200	Head Guard Bracket Top
39	1	30331300	Head Guard Bracket Side
40	1	30197800	Guard Cover
41	2	30198600	Guard Side
42	1	30196000	Guard Back Plate
43	1	04074100	Idler Sprocket #80-12T
44	3	330571	Hex Nut 5/8"
45	2	330183	Flat Washer 5/8"
46	1	04121000	HHCS 5/8" x 3"
47	64	01057900	HHCS 1/4" x 3/4"
48	64	330522	Nylock 1/4"
49	1	30211700	Sheave Guard Cover
50	1	30218200	Tail Guard Side
51	1	30221600	Tail Guard Back Plate
60	2	465385	Coupler Male ¾ FOR
61	2	466912	Adapter Straight ¾ MOR / ½ NPTF
62	1	00627000	Adapter Straight ½ NPTM / ½ NPTM
63	1	03227600	Hyd. Ball Valve ½ NPTF
64	2	463513	Adapter 90° -Restrictor ½ NPTM / ⅜ NPTF Sw
65	2	61471900	Hose ⅜ x 720" ½ NPTM / ⅜ NPTM

50' Electric Drive Options

Description	#63079800 380 FPM	#63009500 457 FPM	#63010300 578 FPM	#63014500 706 FPM	#63081400 858 FPM
A- Bushing	00730200	00730200	00730200	00730200	00730200
B- Sprocket	03163300	03163300	03163300	01304500	01304500
C- Key	20072500	20072500	20072500	20072500	20072500
D- Bushing	04332300	04332300	04332300	04332300	04332300
E- Sprocket	01303700	01303700	01303700	01303700	01303700
F- Key	10490100	10490100	10490100	10490100	10490100
G- Chain	30333900	30333900	30333900	30334700	30334700
H- Connector	00232900	00232900	00232900	00232900	00232900
I- Sheave	04285300	04285300	04285300	04285300	04285300
J- V-Belt	03578200	03562600	01014000	03578200	03562600
K- Bushing	04322400	04322400	01855600	04322400	04322400
L- Sheave	04371100	04303400	04425500	04371100	04303400

50' BeltVeyor - PTO
Head,Tail, and Pan

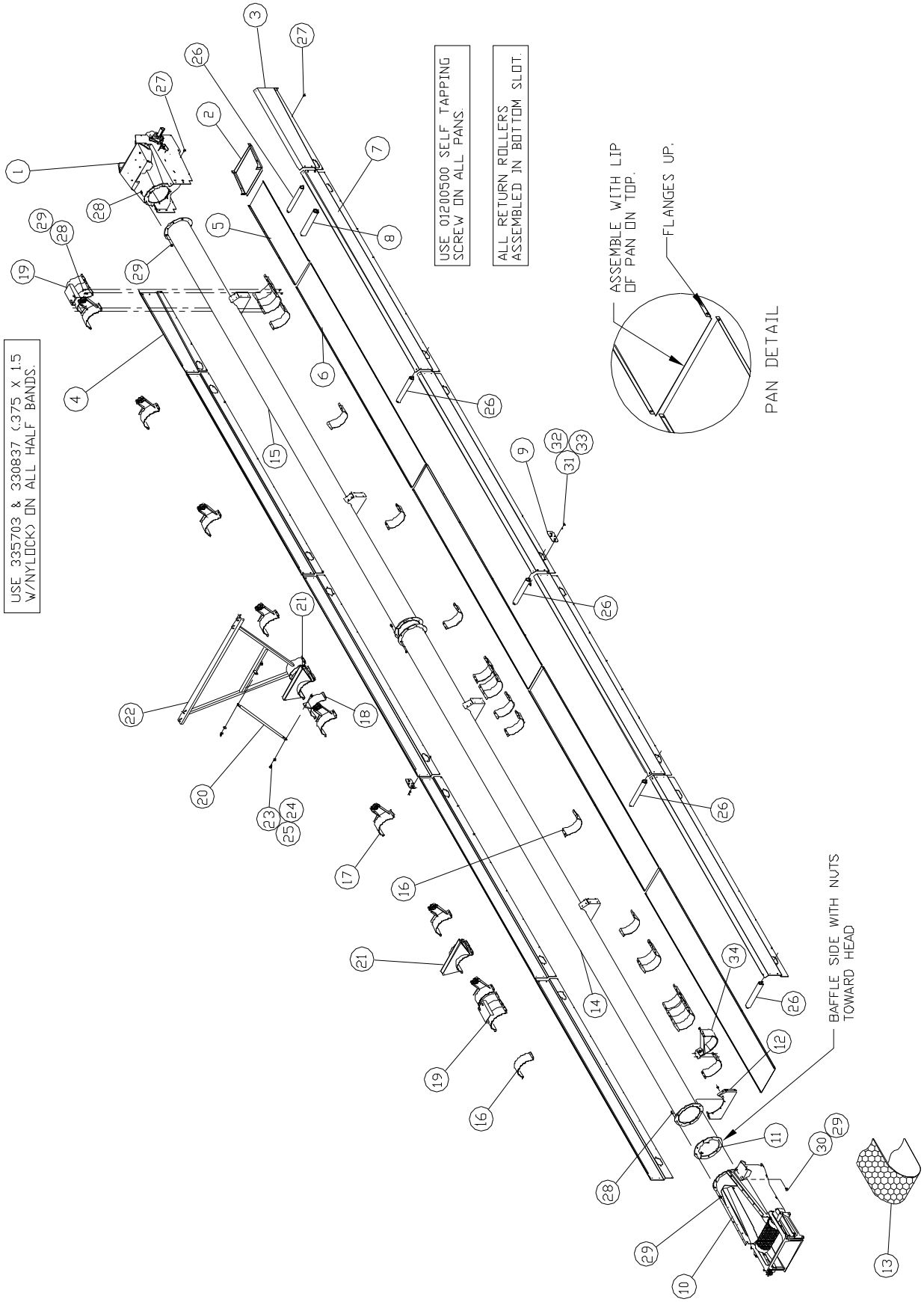

50' BeltVeyor - PTO
Head, Tail and Pan

Dimensions from end of tube to half bands.

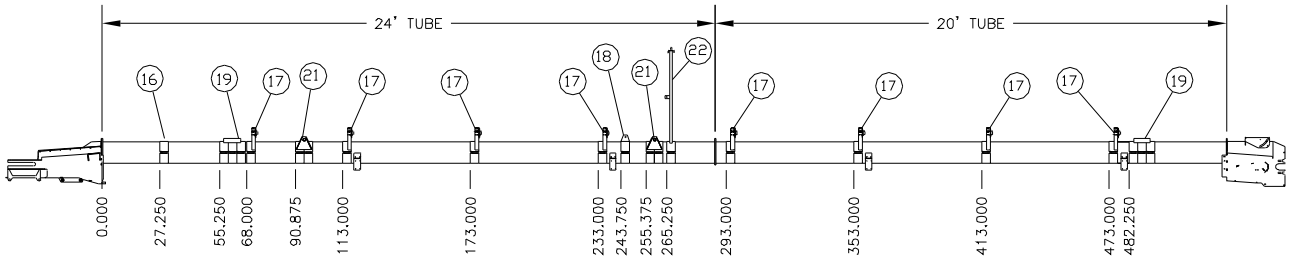

#63111900

Item	Qty	Part No.	Description
1	1	63086300	Head Assembly -10" Roller
2	1	30720700	Head Pan
3	1	30719900	Pan Side 4' Right
4	1	30161400	Pan Side 4' Left
5	1	30162200	Pan 4'
6	4	30164800	Pan 10'
7	8	30163000	Pan Side 10'
8	1	60196300	Plastic Roller 2 3/8"
9	18	30328900	Roller Slot Cover
10	1	62951900	Tail Assembly
11	1	82762600	Baffle
12	1	30731400	Tail Mount
13	1	63063200	Honeycomb Belt 16" x 98'-11"
14	1	82716200	Tube 10" x 24'
15	1	82717000	Tube 10" x 20'
16	22	10319210	Half Band 4 x 10
17	8	63085500	Bearing Mount Assembly
18	1	82742800	Truss Brace
19	2	82737800	Cable Mount
20	1	17122300	Truss Arm
21	2	82907700	Axle Mount
22	1	82739400	Truss Long
23	2	01180900	HHCS ½" x 1 1/4"
24	2	330159	Flat Washer ½"
25	2	331363	Nylock ½"
26	5	63104400	Plastic Roller 2"
27	140	01200500	Screw 5/16 x 3/4 Washer Head Self-Tap
28	109	335703	HHCS 3/8 x 1½"
29	111	330837	Nylock 3/8"
30	2	332890	Carriage Bolt 3/8" x 1 3/4"
31	36	337949	Carriage Bolt 1/4 x 3/4"
32	36	02016400	Flat Washer 1/4"
33	36	330522	Nylock 1/4"
34	1	62056700	PTO Shaft Carrier

50' Beltveyor - PTO
Conveyor Parts

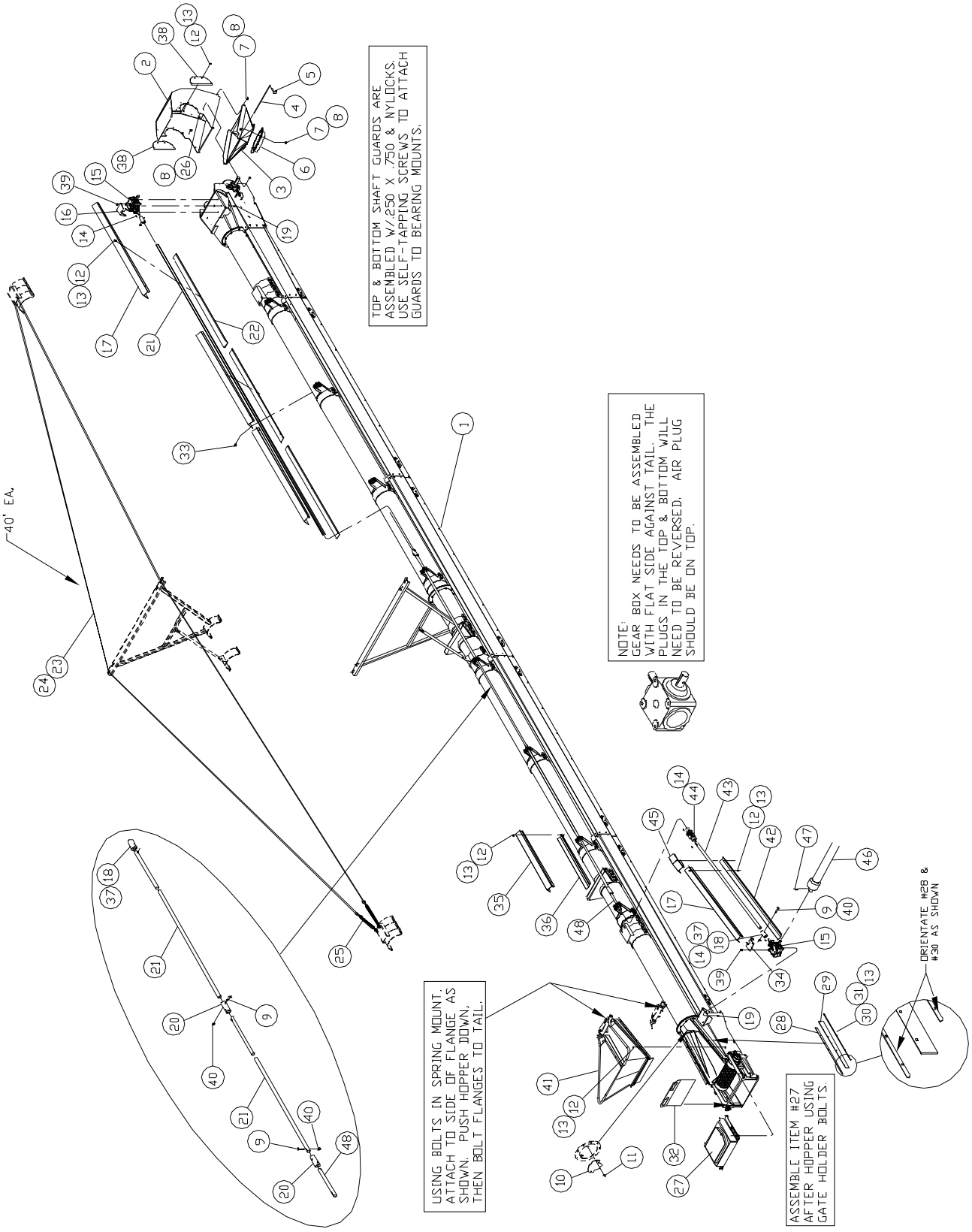

50' BeltVeyor - PTO
Conveyor Parts

#63112700

Item	Qty	Part No.	Description
1	1	63111900	Head-Tail-Tube Assembly
2	1	63022800	Spout Top w/lining
3	1	82779000	Spout Bottom -10" Round
4	1	30302400	Spout Pin
5	2	330928	Klik Pin 3/16"
6	1	82791500	10" Spout Tube
7	11	01145200	HHCS 3/8 x 3/4"
8	17	330837	Nylock 3/8"
9	6	331926	HHCS ½" x 2"
10	1	30337000	Baffle Plate
11	2	01017300	HHCS 3/8" x 1"
12	66	01057900	HHCS 1/4" x 3/4"
13	80	330522	Nylock 1/4"
14	3	10490100	Key 1/4 x 1 1/4"
15	2	04007100	Gear Box
16	1	30213300	Head Guard Mount
17	8	30200000	Shaft Guard Top Long
18	2	30202600	Sleeve w/keyway
19	8	01010800	HHCS 5/16" x 1"
20	2	30203400	Shaft Sleeve
21	2	30592000	Drive Shaft
22	7	30199400	Shaft Guard Bottom Long
23	80'	01506500	Cable 3/8 x 19
24	8	01502400	Cable Clamp 3/8
25	2	04151700	Turnbuckle 5/8" x 9
26	6	330654	Carriage Bolt 3/8 x 1"
27	1	62956800	Belt Cover & Brush
28	2	30158000	Inner Skirtboard
29	2	30157200	Nylon Skirtboard
30	2	30159800	Outer Skirtboard
31	14	333633	HHCS 1/4 x 1 1/4"
32	1	30204200	Tail Door
33	56	01200500	Screw 5/16 x 3/4 Washer Head Self-Tap
34	1	30212500	Tail Guard Mount
35	1	30476600	Shaft Guard Top Short
36	1	30475800	Shaft Guard Bottom Short
37	2	337758	Set Screw 1/4-20 x 1/4"
38	2	30721500	Spout Guard
39	4	01144500	HHCS 5/16" x 3/4"
40	6	331363	Nylock ½"
41	1	62997200	Flex Hopper Assembly
42	1	30477400	Shaft Guard -Bottom Drive
43	1	30472500	Shaft -Bottom Drive
44	1	04120200	U-Joint 12N 1 1/4 x 1 1/4 Round
45	1	30474100	Guard Splice
46	1	06273700	PTO Shaft
47	1	08993800	Roll Pin 1/4" x 2"
48	1	30473300	Keyed Shaft

50' Beltveyor - PTO
Drive and Undercarriage

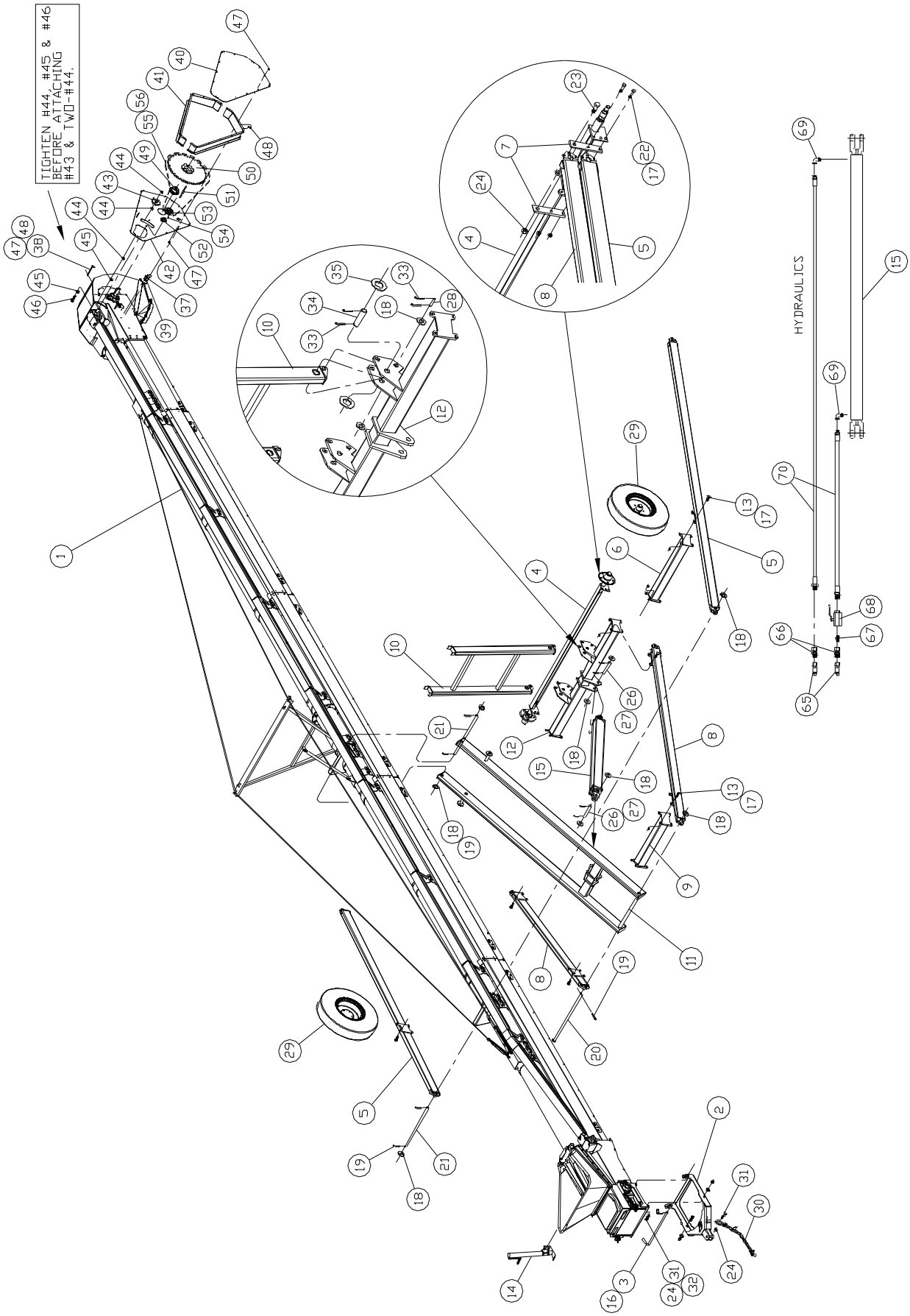

50' BeltVeyor - PTO
Drive and Undercarriage

#90899600

Item	Qty	Part No.	Description
1	1	63112700	Conveyor Assembly
2	1	82745100	Pivot Hitch
3	1	30243000	Pivot Hitch Handle
4	1	71022800	Axle & Hub Assembly
5	2	82823600	Axle Arm
6	1	82847500	Axle Arm Cross Brace
7	4	15999600	Axle Bracket
8	2	82850900	Lower Lift Arm
9	1	82824400	Upper Cross Brace
10	1	82828500	Upright
11	1	82846700	Upper Lift Arm
12	1	82822800	Lower Cylinder Bar
13	24	01140300	Carriage Bolt ½" x 2"
14	1	531558	Jack 20,000# Side Crank Bottom Mount
15	1	466953	Hydraulic Cylinder 4 x 48
16	1	330928	Klik Pin 3/16"
17	28	331363	Nylock ½"
18	15	330407	Flat Washer 1"
19	5	336081	Cotter Pin 1/4 x 3"
20	1	82825100	Pivot Pin
21	2	30764500	Axle Arm Shaft
22	4	335422	HHCS ½" x 2½"
23	2	335174	HHCS 3/4" x 2½"
24	5	330316	Nylock 3/4"
25			
26	2	14288500	Pin 1" x 5 1/8"
27	4	02154300	Cotter Pin 5/32" x 1 3/4"
28	2	18972000	Pin 1" x 4 3/4"
29	2	807313	Tire & Rim 9.5L x 15 6Ply 5 bolt rim
30	1	433938	Safety Chain 11,000#
31	3	02307700	HHCS 3/4" x 3"
32	2	330340	Flat Washer 3/4"
33	6	02288900	Cotter Pin 3/16" x 2"
34	2	14402200	Pin 1 1/4" x 4 3/4"
35	4	330415	Flat Washer 1 1/4"
36	2	330597	Nylock 1"
37	2	01200500	Screw 5/16 x 3/4" Washer Head Self Tap
38	1	30732200	Head Guard Bracket Top
39	1	30331300	Head Guard Bracket Side
40	1	30197800	Guard Cover
41	2	30198600	Guard Side
42	1	30196000	Guard Back Plate
43	1	04074100	Idler Sprocket #80-12T
44	3	330571	Hex Nut 5/8"
45	2	330183	Flat Washer 5/8"
46	1	04121000	HHCS 5/8" x 3"
47	41	01057900	HHCS 1/4" x 3/4"
48	41	330522	Nylock 1/4"
49	1	00730200	Bushing 1½" SF QD
50	1	01420900	Sprocket #80 26T SF
51	3	20072500	Key 3/8" x 2"
52	1	04332300	Bushing 1" SK
53	1	01303700	Sprocket #80 15T SK
54	4	10490100	Key 1/4" x 1 1/4"
55	1	14498000	Chain #80 x 60P
56	1	00232900	Chain #80 Connector
65	2	465385	Coupler Male ¾ FOR
66	2	466912	Adapter Straight ¾ MOR / ½ NPTF
67	1	00627000	Adapter Straight ½ NPTM / ½ NPTM
68	1	03227600	Hyd. Ball Valve ½ NPTF
69	2	463513	Adapter 90° -Restrictor ½ NPTM / ⅜ NPTF Sw
70	2	61471900	Hose ⅜ x 720" ½ NPTM / ⅜ NPTM

70' BeltVeyor

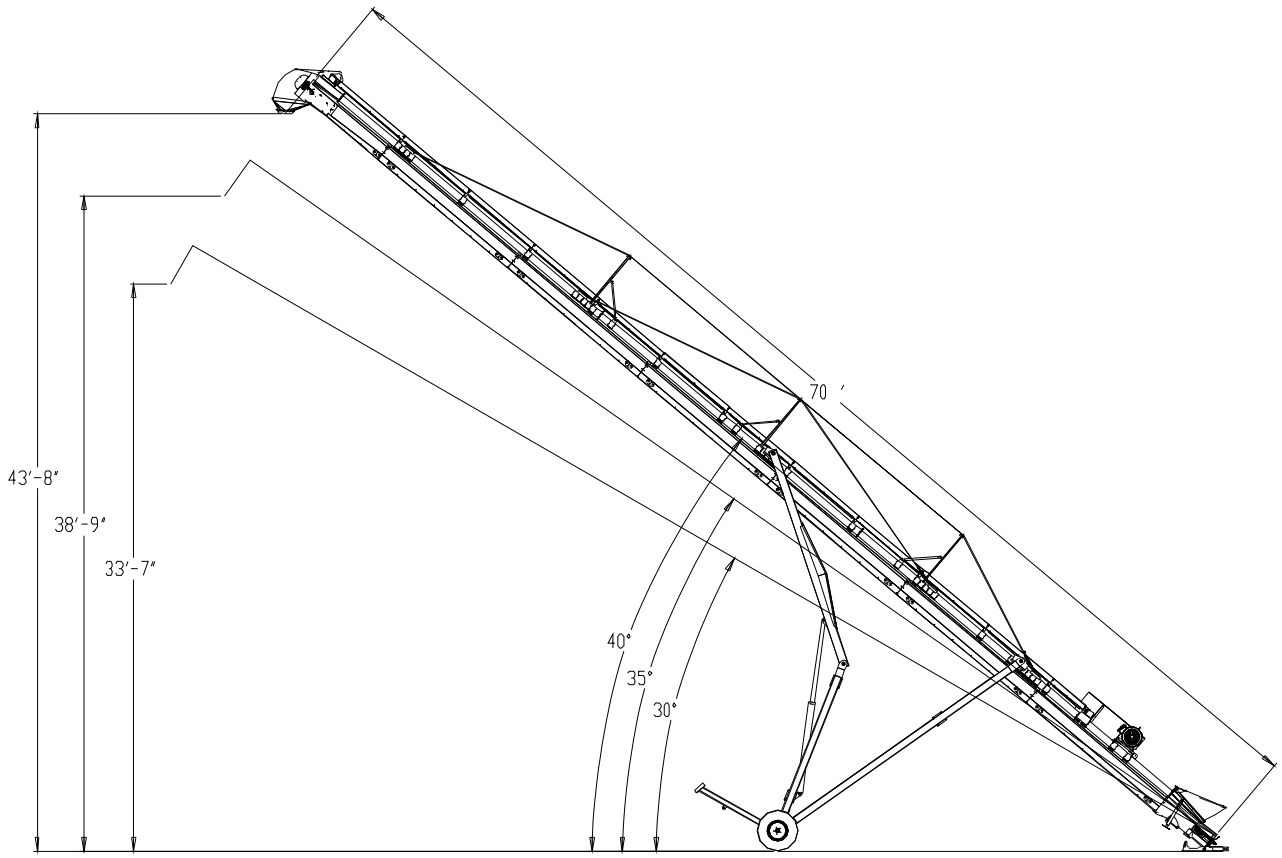

70'-16" Honeycomb Belt				70'-16" Crescent Belt			
ft/min	angle	bu/hr	hp	ft/min	angle	bu/hr	hp
380	30	3000	15.4	380	27	2700	14.0
380	35	2750	16.0				
380	40	2500	16.7				
457	30	3483	16.8	457	27	3000	16.9
457	35	3193	17.4				
457	40	2903	18.2				
576	30	4230	18.9	576	27	3410	17.6
576	35	3878	19.7				
576	40	3525	20.5				
706	30	5046	21.2	706	27	3750	20.0
706	35	4626	22.1				
706	40	4205	23.0				
858	30	6000	23.5	858	27	4000	21.0
858	35	5500	24.5				
858	40	5000	25.5				

All bu/hr was done with 60 lb/bu wheat @ 12%-15% moisture

Undercarriage -	hydraulic	
Available drives -	Electric	
	PTO	
Electric -	25 hp minimum	
	Use 3 phase @1800 RPM	
PTO -	Use 540 PTO	
Drive Type -	Head drive jack-shaft style	
Belt -	16" Honeycomb cleat	
	16" crescent	
Maximum angle -	Crescent	27 degrees
	Honeycomb	40 plus degrees

Operations above recommended angle WILL result in damage to unit.

70' BeltVeyor - Electric
Head, Tail and Pan

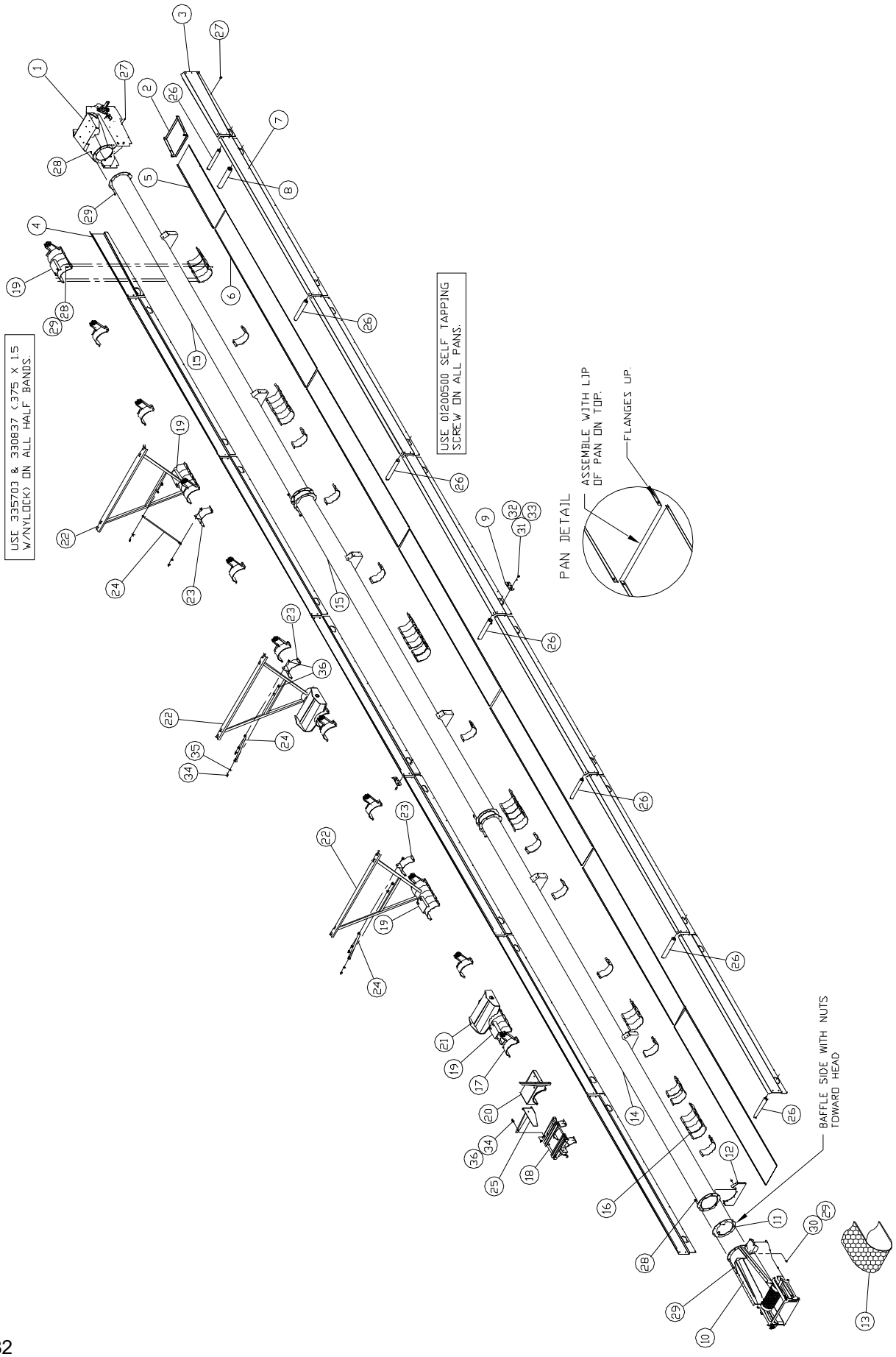

70' BeltVeyor - Electric
Head, Tail and Pan

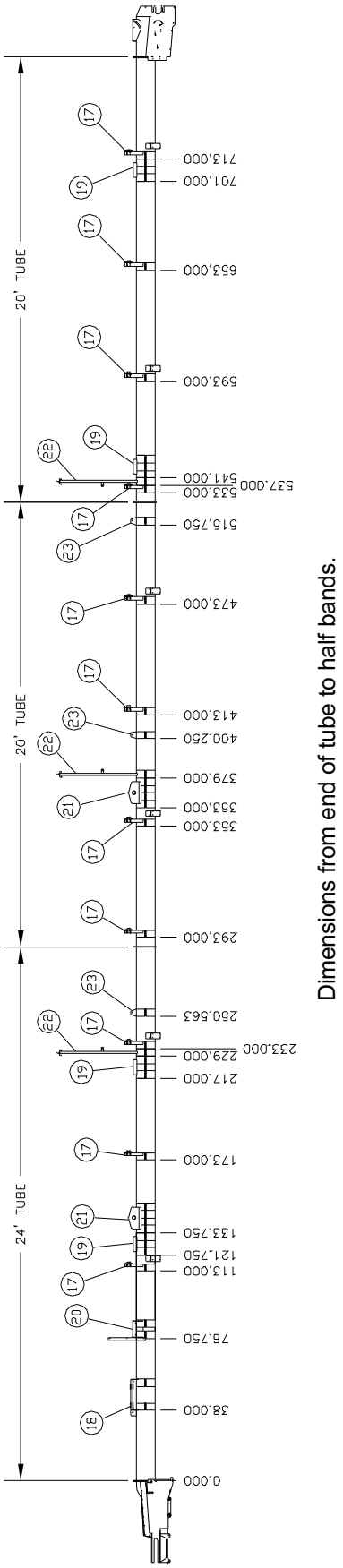

#62968300

Item	Qty	Part No.	Description
1	1	63086300	Head Assembly -10" Roller
2	1	30720700	Head Pan
3	1	30719900	Pan Side 4' Right
4	1	30161400	Pan Side 4' Left
5	1	30162200	Pan 4'
6	6	30164800	Pan 10'
7	12	30163000	Pan Side 10'
8	1	60196300	Plastic Roller 2 3/8"
9	26	30328900	Roller Slot Cover
10	1	62951900	Tail Assembly
11	1	82762600	Baffle
12	1	30731400	Tail Mount
13	1	62992300	Honeycomb Belt 16" x 138'-10"
14	1	82716200	Tube 10" x 24'
15	2	82717000	Tube 10" x 20'
16	41	10319210	Half Band 4 x 10
17	11	63085500	Bearing Mount Assembly
18	1	81879900	Electric Motor Mount
19	4	82737800	Cable Mount
20	1	82729500	Gear Box Mount
21	2	82907700	Axle Mount
22	3	82739400	Truss Long
23	3	82742800	Truss Brace
24	3	17122300	Truss Arm
25	1	30222400	Tail Guard Bracket
26	7	63104400	Plastic Roller 2"
27	200	01200500	Screw 5/16 x 3/4 Washer Head Self-Tap
28	198	335703	HHCS 3/8 x 1½"
29	200	330837	Nylock 3/8
30	2	332890	Carriage Bolt 3/8" x 1 3/4"
31	52	337949	Carriage Bolt 1/4 x 3/4"
32	52	02016400	Flat Washer 1/4"
33	52	330522	Nylock 1/4"
34	8	01180900	HHCS ½" x 1 1/4"
35	6	330159	Flat Washer ½"
36	8	331363	Nylock ½"

70' BeltVeyor - Electric
Conveyor Parts

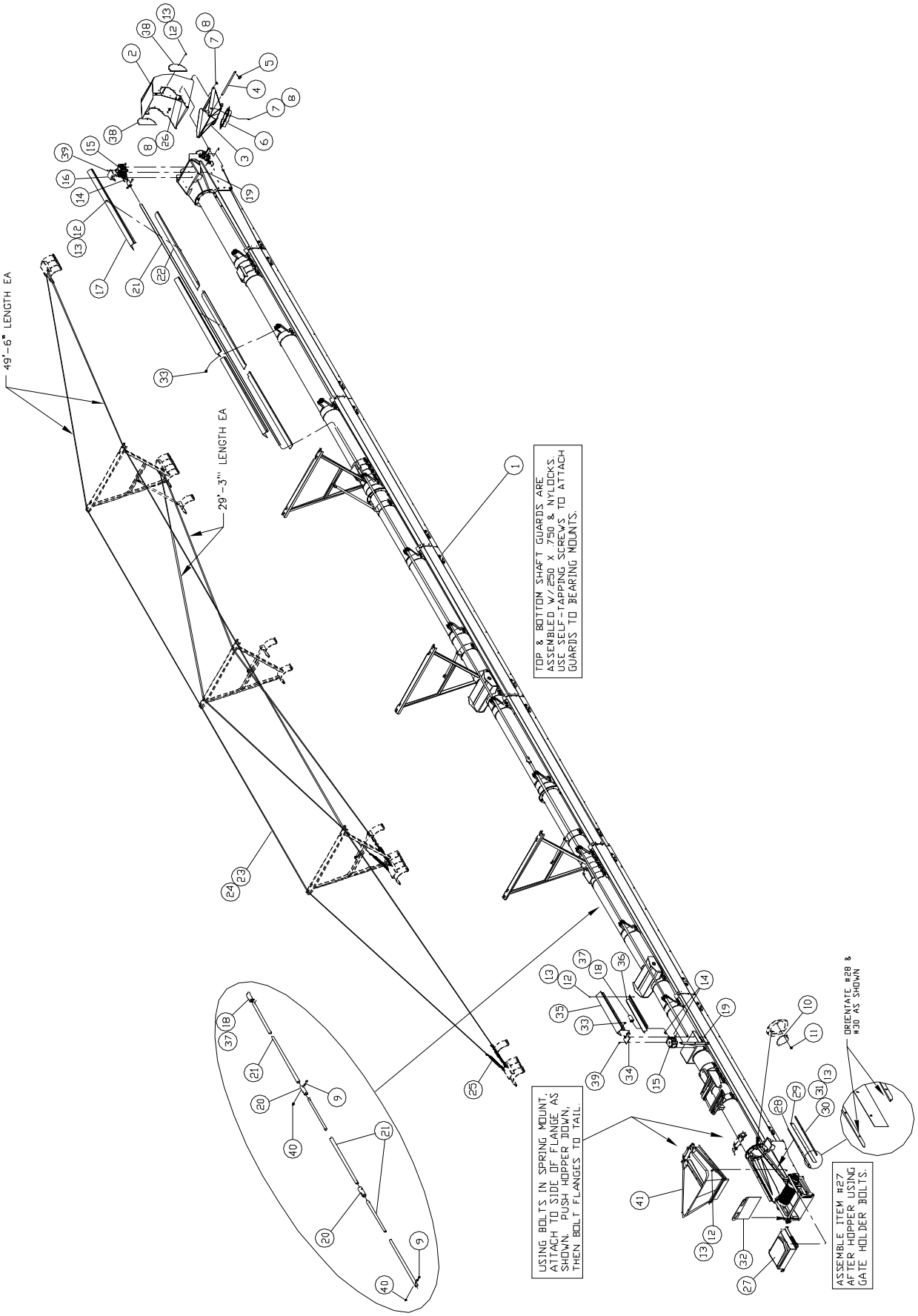

70' BeltVeyor - Electric
Conveyor Parts

#62969100

Item	Qty	Part No.	Description
1	1	62968300	Head-Tail-Tube Assembly
2	1	63022800	Spout Top w/lining
3	1	82779000	Spout Bottom -10" Round
4	1	30302400	Spout Pin
5	2	330928	Klik Pin 3/16"
6	1	82791500	10" Spout Tube
7	11	01145200	HHCS 3/8 x 3/4"
8	17	330837	Nylock 3/8"
9	6	331926	HHCS ½" x 2"
10	1	30337000	Baffle Plate
11	2	01017300	HHCS 3/8" x 1"
12	96	01057900	HHCS 1/4" x 3/4"
13	110	330522	Nylock 1/4"
14	3	10490100	Key 1/4 x 1 1/4"
15	2	04007100	Gear Box
16	1	30213300	Head Guard Mount
17	11	30200000	Shaft Guard Top Long
18	2	30202600	Sleeve w/keyway
19	8	01010800	HHCS 5/16" x 1"
20	2	30203400	Shaft Sleeve
21	3	30201800	Drive Shaft
22	11	30199400	Shaft Guard Bottom Long
23	157.5'	01506500	Cable 3/8 x 19
24	16	01502400	Cable Clamp 3/8
25	4	04151700	Turnbuckle 5/8" x 9
26	6	330654	Carriage Bolt 3/8 x 1"
27	1	62956800	Belt Cover & Brush
28	2	30158000	Inner Skirtboard
29	2	30157200	Nylon Skirtboard
30	2	30159800	Outer Skirtboard
31	14	333633	HHCS 1/4 x 1 1/4"
32	1	30204200	Tail Door
33	96	01200500	Screw 5/16 x 3/4 Washer Head Self-Tap
34	1	30212500	Tail Guard Mount
35	1	30373500	Shaft Guard Top Short
36	1	30374300	Shaft Guard Bottom Short
37	2	337758	Set Screw 1/4-20 x 1/4"
38	2	30721500	Spout Guard
39	4	01144500	HHCS 5/16" x 3/4"
40	6	331363	Nylock ½"
41	1	62997200	Flex Hopper Assembly

70' BeltVeyor - Electric
Drive and Undercarriage

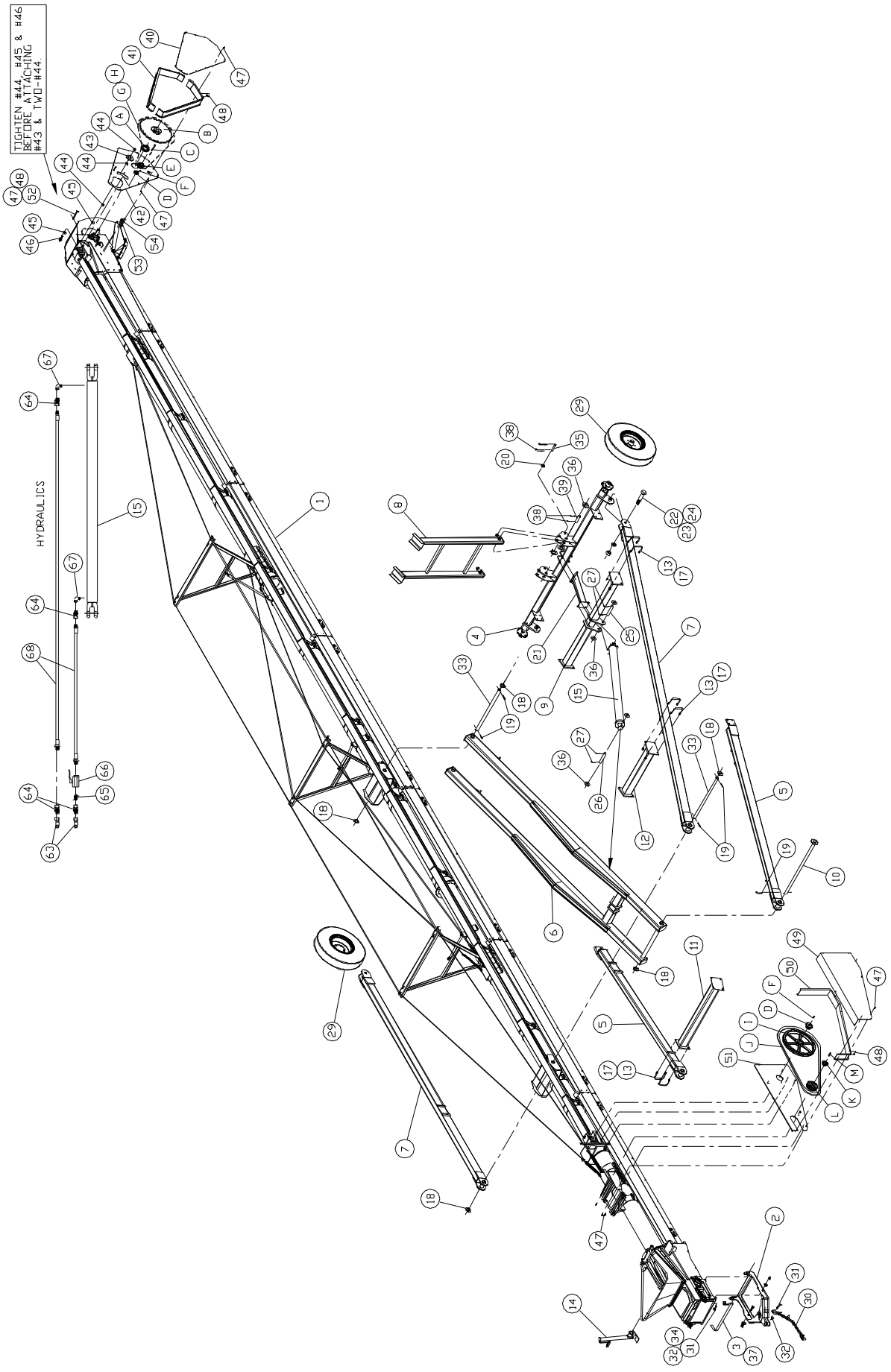

70' BeltVeyor - Electric
Drive and Undercarriage

#90867300

Item	Qty	Part No.	Description
1	1	62969100	Conveyor Assembly
2	1	82745100	Pivot Hitch
3	1	30243000	Pivot Hitch Handle
4	1	61432100	Axle & Hub Assembly
5	2	82751900	Lift Arm Lower
6	1	82752700	Lift Arm Upper
7	2	82753500	Axle Arm
8	1	82789900	Lift Arm Support
9	1	82755000	Cylinder Bar Lower
10	1	82748500	Axle Pivot
11	1	82749300	Axle Lift Arm
12	1	82750100	Lift Arm Brace
13	16	14307300	U-bolt ½" x 4½" x 5"
14	1	531558	Jack 20,000# Side Crank w/Bottom Mount
15	1	474049	Hydraulic Cylinder 5 x 60
16	1	330928	Klik Pin 3/16"
17	32	331363	Nylock ½"
18	5	330423	Flat Washer 1½"
19	5	336081	Cotter Pin 1/4 x 3"
20	4	330407	Flat Washer 1"
21	1	82899600	Axle Brace
22	2	338863	HHCS 1½" x 6"
23	2	335943	Lock Washer 1½"
24	2	331082	Hex Nut 1½"
25	1	30362800	Pin 1 1/4" x 8 5/16"
26	1	30363600	Pin 1 1/4" x 5 7/16"
27	4	02154300	Cotter Pin 5/32" x 1 3/4"
28	2	18972000	Pin 1" x 4 3/4"
29	2	807313	Tire & Rim 9.5L x 15 6Ply 5 bolt rim
30	1	433938	Safety Chain 11,000#
31	3	02307700	HHCS 3/4" x 3"
32	3	330316	Nylock 3/4"
33	2	30763700	Axle Arm Pin
34	2	330340	Flat Washer 3/4"
35	2	330357	HHCS 1" x 5½"
36	8	330415	Flat Washer 1 1/4"
37			
38	6	02288900	Cotter Pin 3/16" x 2"
39	2	14402200	Pin 1 1/4" x 4 3/4"
40	1	30197800	Guard Cover
41	2	30198600	Guard Side
42	1	30196000	Guard Back Plate
43	1	04074100	Idler Sprocket #80-12T
44	3	330571	Hex Nut 5/8"
45	2	330183	Flat Washer 5/8"
46	1	04121000	HHCS 5/8" x 3"
47	64	01057900	HHCS 1/4" x 3/4"
48	64	330522	Nylock 1/4"
49	1	30211700	Sheave Guard Cover
50	1	30218200	Tail Guard Side
51	1	30221600	Tail Guard Back Plate
52	1	30732200	Head Guard Bracket Top
53	1	30331300	Head Guard Bracket Side
54	2	01200500	Screw 5/16" x 3/4" Washer Head Self Tap
63	2	465385	Coupler Male ¾ FOR
64	4	466912	Adapter Straight ¾ MOR / ½ NPTF
65	1	00627000	Adapter Straight ½ NPTM / ½ NPTM
66	1	03227600	Hyd. Ball Valve ½ NPTF
67	2	463513	Adapter 90° -Restrictor ½ NPTM / ⅜ NPTF Sw
68	2	61471900	Hose ⅜ x 720" ½ NPTM / ⅜ NPTM

70' Electric Drive Options

Description	#63011100 380 FPM	#63015200 457 FPM	#63105100 706 FPM	#63012900 858 FPM
A- Bushing	00730200	00730200	00730200	00730200
B- Sprocket	03163300	03163300	01304500	01304500
C- Key	20072500	20072500	20072500	20072500
D- Bushing	04332300	04332300	04332300	04332300
E- Sprocket	01303700	01303700	01303700	01303700
F- Key	10490100	10490100	10490100	10490100
G- Chain	30333900	30333900	30334700	30334700
H- Connector	00232900	00232900	00232900	00232900
I- Sheave	04285300	04285300	04285300	04285300
J- V-Belt	03578200	03562600	03578200	03562600
K- Bushing	01505700	01505700	01505700	01505700
L- Sheave	04371100	04303400	04371100	04303400
M-Key	12993200	12993200	12993200	04303400

70' BeltVeyor - PTO
Head,Tail, and Pan

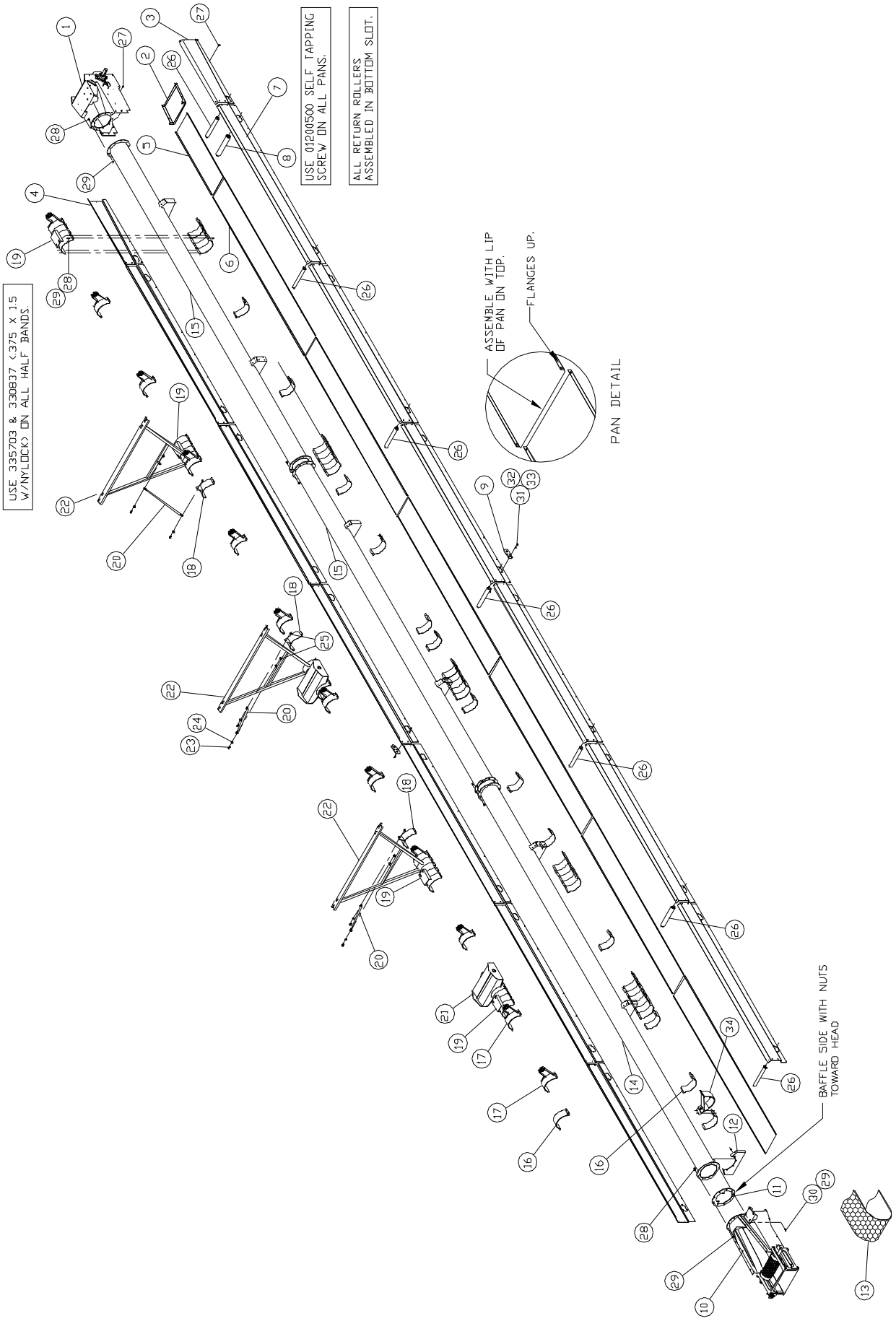

70' BeltVeyor - PTO
Head, Tail and Pan

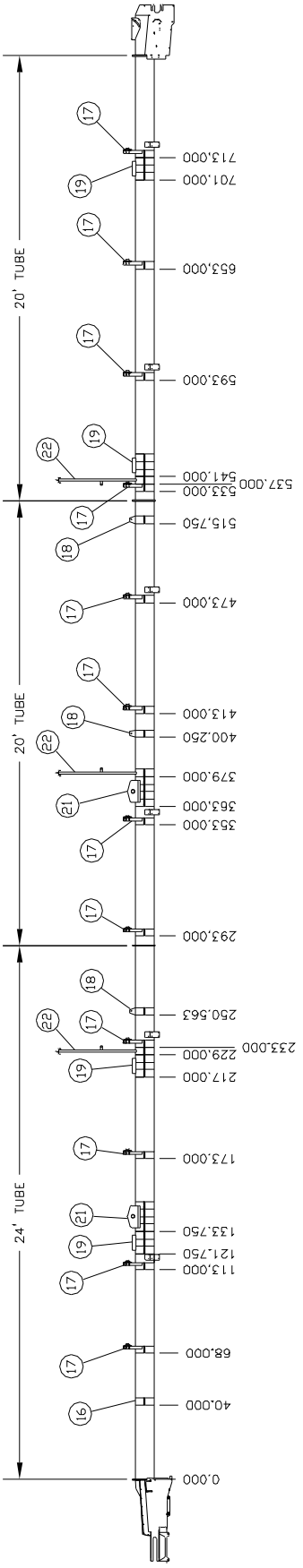

Dimensions from end of tube to half bands.

#63108500

Item	Qty	Part No.	Description
1	1	63086300	Head Assembly -10" Roller
2	1	30720700	Head Pan
3	1	30719900	Pan Side 4' Right
4	1	30161400	Pan Side 4' Left
5	1	30162200	Pan 4'
6	6	30164800	Pan 10'
7	12	30163000	Pan Side 10'
8	1	60196300	Plastic Roller 2 3/8"
9	26	30328900	Roller Slot Cover
10	1	62951900	Tail Assembly
11	1	82762600	Baffle
12	1	30731400	Tail Mount
13	1	62992300	Honeycomb Belt 16" x 138'-10"
14	1	82716200	Tube 10" x 24'
15	2	82717000	Tube 10" x 20'
16	40	10319210	Half Band 4 x 10
17	12	63085500	Bearing Mount Assembly
18	3	82742800	Truss Brace
19	4	82737800	Cable Mount
20	3	17122300	Truss Arm
21	2	82727900	Axle Mount
22	3	82739400	Truss Long
23	6	01180900	HHCS ½" x 1 1/4"
24	6	330159	Flat Washer ½"
25	6	331363	Nylock ½"
26	7	63104400	Plastic Roller 2"
27	200	01200500	Screw 5/16 x 3/4 Washer Head Self-Tap
28	190	335703	HHCS 3/8 x 1½"
29	192	330837	Nylock 3/8"
30	2	332890	Carriage Bolt 3/8" x 1 3/4"
31	52	337949	Carriage Bolt 1/4 x 3/4"
32	52	02016400	Flat Washer 1/4"
33	52	330522	Nylock 1/4"
34	1	62056700	PTO Shaft Carrier

70' Beltveyor - PTO
Conveyor Parts

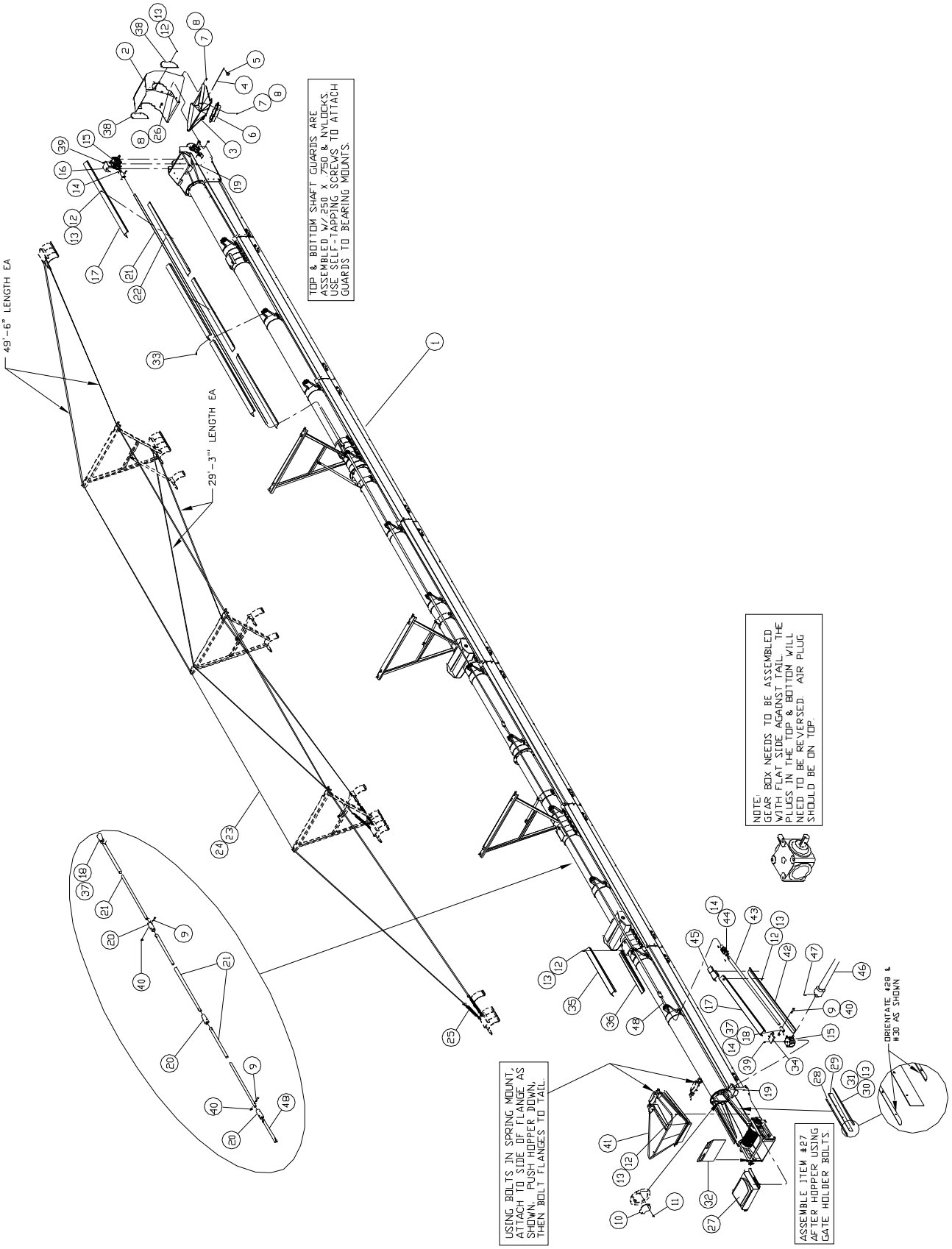

70' BeltVeyor - PTO
Conveyor Parts

#63109300

Item	Qty	Part No.	Description
1	1	63108500	Head-Tail-Tube Assembly
2	1	63022800	Spout Top w/lining
3	1	82779000	Spout Bottom -10" Round
4	1	30302400	Spout Pin
5	2	330928	Klik Pin 3/16"
6	1	82791500	10" Spout Tube
7	11	01145200	HHCS 3/8 x 3/4"
8	17	330837	Nylock 3/8"
9	8	331926	HHCS ½" x 2"
10	1	30337000	Baffle Plate
11	2	01017300	HHCS 3/8" x 1"
12	98	01057900	HHCS 1/4" x 3/4"
13	112	330522	Nylock 1/4"
14	3	10490100	Key 1/4 x 1 1/4"
15	2	04007100	Gear Box
16	1	30213300	Head Guard Mount
17	12	30200000	Shaft Guard Top Long
18	2	30202600	Sleeve w/keyway
19	8	01010800	HHCS 5/16" x 1"
20	3	30203400	Shaft Sleeve
21	3	30201800	Drive Shaft
22	11	30199400	Shaft Guard Bottom Long
23	157.5'	01506500	Cable 3/8 x 19
24	16	01502400	Cable Clamp 3/8
25	4	04151700	Turnbuckle 5/8" x 9
26	6	330654	Carriage Bolt 3/8 x 1"
27	1	62956800	Belt Cover & Brush
28	2	30158000	Inner Skirtboard
29	2	30157200	Nylon Skirtboard
30	2	30159800	Outer Skirtboard
31	14	333633	HHCS 1/4 x 1 1/4"
32	1	30204200	Tail Door
33	104	01200500	Screw 5/16 x 3/4 Washer Head Self-Tap
34	1	30212500	Tail Guard Mount
35	1	30476600	Shaft Guard Top Short
36	1	30475800	Shaft Guard Bottom Short
37	2	337758	Set Screw 1/4-20 x 1/4"
38	2	30721500	Spout Guard
39	4	01144500	HHCS 5/16" x 3/4"
40	8	331363	Nylock ½"
41	1	62997200	Flex Hopper Assembly
42	1	30477400	Shaft Guard -Bottom Drive
43	1	30472500	Shaft -Bottom Drive
44	1	04120200	U-Joint 12N 1 1/4 x 1 1/4 Round
45	1	30474100	Guard Splice
46	1	06273700	PTO Shaft
47	1	08993800	Roll Pin 1/4" x 2"
48	1	30473300	Keyed Shaft

70' Beltveyor - PTO
Drive and Undercarriage

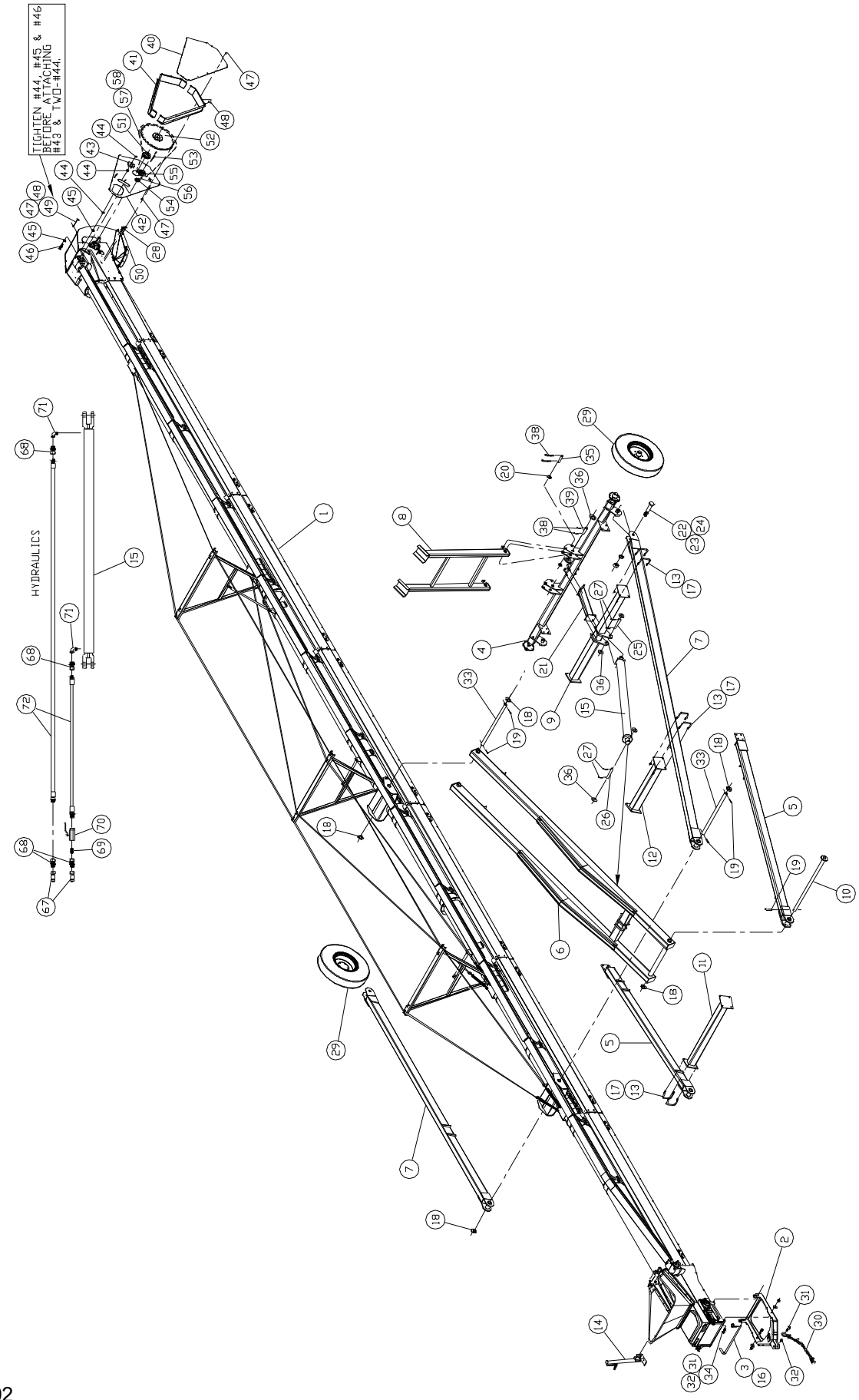

70' BeltVeyor - PTO
Drive and Undercarriage

#90898800

Item	Qty	Part No.	Description
1	1	63109300	Conveyor Assembly
2	1	82745100	Pivot Hitch
3	1	30243000	Pivot Hitch Handle
4	1	61432100	Axle & Hub Assembly
5	2	82751900	Lift Arm Lower
6	1	82752700	Lift Arm Upper
7	2	82753500	Axle Arm
8	1	82789900	Lift Arm Support
9	1	82755000	Cylinder Bar Lower
10	1	82748500	Axle Pivot
11	1	82749300	Axle Lift Arm
12	1	82750100	Lift Arm Brace
13	16	14307300	U-bolt ½" x 4½" x 5"
14	1	531558	Jack 20,000# Side Crank w/Bottom Mount
15	1	474049	Hydraulic Cylinder 5 x 60
16	1	330928	Klik Pin 3/16"
17	32	331363	Nylock ½"
18	5	330423	Flat Washer 1½"
19	5	336081	Cotter Pin 1/4 x 3"
20	4	330407	Flat Washer 1"
21	1	82899600	Axle Brace
22	2	338863	HHCS 1½" x 6"
23	2	335943	Lock Washer 1½"
24	2	331082	Hex Nut 1½"
25	1	30362800	Pin 1 1/4" x 8 5/16"
26	1	30363600	Pin 1 1/4" x 5 7/16"
27	4	02154300	Cotter Pin 5/32" x 1 3/4"
28	2	01200500	Screw 5/16" x 3/4" Washer Head Self Tap
29	2	807313	Tire & Rim 9.5L x 15 6Ply 5 bolt rim
30	1	433938	Safety Chain 11,000#
31	3	02307700	HHCS 3/4" x 3"
32	3	330316	Nylock 3/4"
33	2	30763700	Axle Arm Pin
34	2	330340	Flat Washer 3/4"
35	2	18972000	Pin 1" x 4 3/4"
36	8	330415	Flat Washer 1 1/4"
37			
38	6	02288900	Cotter Pin 3/16" x 2"
39	2	14402200	Pin 1 1/4" x 4 3/4"
40	1	30197800	Guard Cover
41	2	30198600	Guard Side
42	1	30196000	Guard Back Plate
43	1	04074100	Idler Sprocket #80-12T
44	3	330571	Hex Nut 5/8"
45	2	330183	Flat Washer 5/8"
46	1	04121000	HHCS 5/8" x 3"
47	41	01057900	HHCS 1/4" x 3/4"
48	41	330522	Nylock 1/4"
49	1	30732200	Head Guard Bracket Top
50	1	30331300	Head Guard Bracket Side
51	1	00730200	Bushing 1½" SF QD
52	1	01420900	Sprocket #80 26T SF
53	3	20072500	Key 3/8" x 2"
54	1	04332300	Bushing 1" SK
55	1	01303700	Sprocket #80 15T SK
56	4	10490100	Key 1/4" x 1 1/4"
57	1	14498000	Chain #80 x 60 Pitches
58	1	00232900	Chain #80 Connector
67	2	465385	Coupler Male ¾ FOR
68	4	466912	Adapter Straight ¾ MOR / ½ NPTF
69	1	00627000	Adapter Straight ½ NPTM / ½ NPTM
70	1	03227600	Hyd. Ball Valve ½ NPTF
71	2	463513	Adapter 90° -Restrictor ½ NPTM / ⅜ NPTF Sw
72	2	61471900	Hose ⅜ x 720" ½ NPTM / ⅜ NPTM

CrustBuster
SPEED KING INC.

P.O.Box 526 Spearville, Kansas 67876 (620) 227-7106